Low Risk Scope of Work Form

Document Reference:	Revision Number	Original Issue Date	Review Date
BGC-CORP-FORM-003	0	January 20, 2025	January 18, 2030

Project Name	**POLLUTION CONTROL DAM**
Site Location:	**CTSF**
Risk Rating of SOW: **(Based on Pre-Bid Risk Assessment)**	☐ **Low** ☒ **Medium** *(Check one)*

Approver	Name	Signature	Date
Technical Representative	URBAIN KISULA		27 October 2026
Safety Only Required for medium risk projects	DESTIN KABUNDI		27 October 2026

1. **Project Overview** 3

2. **General Description of Work** 3

3. **Health and Safety Requirements** 6

4. **Environmental Requirements** 7

5. **Social Requirements** 8

6. **Certifications and Competencies** 9

7. **SOW Management** 10

8. **Appendix** 10

1. PROJECT OVERVIEW

Outline the specific deliverables, objectives and boundaries of the project.

The Pollution Control Dam Project is designed to collect, contain, and manage potentially contaminated surface water, sediment, and runoff generated from operational and industrial activities. The facility will prevent pollutants from entering natural watercourses, ensure compliance with environmental regulations, and protect downstream ecosystems.
The project comprises the construction of a pollution control dam, including associated earthworks, reinforced concrete structures, and piping systems necessary for the collection, storage, treatment, and controlled discharge of water.

2. GENERAL DESCRIPTION OF WORK

2.1. DELIVERABLES (KPI'S)

Deliverable	Description	Expected Date
Deliverable 01	**A well-constructed earthworks embankment in accordance with approved plans and geotechnical specifications that meets stability and compaction requirements.**	2027/01/30
Deliverable 02	**A well-built reinforced concrete structure in accordance with approved drawings and technical specifications that meets quality, durability, and performance standards.**	2027/01/30
Deliverable 03	**A well-constructed pollution control dam in accordance with approved drawings, technical specifications, and engineering standards that effectively controls and contains contaminated water.**	2027/01/30
Deliverable 04	**A fully commissioned pollution control dam facility in accordance with project requirements and regulatory standards that is safe, functional, and fit for purpose.**	2027/01/30
Deliverable 05	Click or tap here to enter text.	Click or tap to enter a date.
Deliverable 06	Click or tap here to enter text.	Click or tap to enter a date.

2.2. PROJECT LOCATION

Provide an address and describe the specific location of the scope of work.
Kibali Gold Mines, Haut Uele Province/ Democratic Republic of Congo. Watsa territory Kibali/Doko site.

2.3. EQUIPMENT AND TOOLS REQUIRED

List all equipment and tools required to perform the Job.

Items supplied by Contractor

hammers, saws, truels, pickaxes, spades, wheelbarrows, grinders,TLB,Juston truck, wooden shutters,compactor.

Items supplied by Barrick

SPINNER TRUCK

2.4. INSURANCE AND WARRANTY REQUIREMENTS

Provide list of applicable insurances or warranties.
Requirements to be identified by the Contract Specialist

Click or tap here to enter text.

2.5. PROJECT RISK IDENTIFICATION

All project risks shall be identified within the Pre-Bid Risk Assessment taking into consideration all safety, environmental and community risks. Please attach the Pre-Bid Risk assessment to this document.

3. HEALTH AND SAFETY REQUIREMENTS

The Contractor shall apply all requirements established in Barrick's Health and Safety standards, as well as policies and procedures. The Contractor must consider all the requirements to prepare and submit a specific health and safety plan for the project using Barrick's Safe Work Plan form (please attach).

3.1 SPECIFIC SAFETY REQUIREMENTS

List the specific safety requirements associated with the job/work and all applicable procedures.

1.

As per BARRICK standards

Click or tap here to enter text.

3.2 HEALTH AND SAFETY PROCEDURES

List all applicable Health and Safety operational procedures.

Click or tap here to enter text.

4. ENVIRONMENTAL REQUIREMENTS

The Contractor shall apply all the requirements established in Barrick's Environmental Guidelines for Contractors, comply with Barrick's Environmental Policy, and meet all other applicable environmental requirements, procedures or standards to present the specific environmental management plan for the project if applicable.

4.1 ENVIRONMENTAL SPECIFIC REQUIREMENTS

List the specific Environmental requirements associated with the job/work and all applicable procedures.

As per Barrick's standart

4.2 ENVIRONMENTAL PROCEDURES

List all applicable Environmental operational procedures.

Click or tap here to enter text.

5. SOCIAL REQUIREMENTS

For the development of this project, the Contractor must apply all the social requirements established in Barrick's social performance policy, with the objective to support the company's social commitment to sustainable development.

5.1 SOCIAL SPECIFIC REQUIREMENTS

List the specific social requirements associated with the job/work and all applicable procedures.

Click or tap here to enter text.

5.2 SOCIAL PROCEDURES
List all applicable Social operational procedures.
Click or tap here to enter text.

6. CERTIFICATIONS AND COMPETENCIES

Mark an X in the box next to all applicable certifications and competencies.

COMPETENCE	Applies	COMPETENCE	Applies
Fall From Heights	☐	Fire (Hot Work)	☒
Confined Space	☐	Hazardous Substances	☒
Stored Energy (LOTOTO)	☒	Excavations and Penetration (trenching)	☒
Lifting	☐	Working with High Voltage Lines	☐
Hazards Recognition/ Risk Assessment	☒	Mobile Equipment	☒
Blasting and Explosives	☐	Other:	☐

Other Applicable Competencies/Certifications
Fall protection certification Risk Assessment

7. SOW MANAGEMENT

The following documents must be attached when submitting this form to the Contract Specialist:

☒ Pre-Bid Risk Assessment

☒ Reference Documents: Images, documents, drawings

☐ Other: Click or tap here to enter text.

8. APPENDIX

Documents:

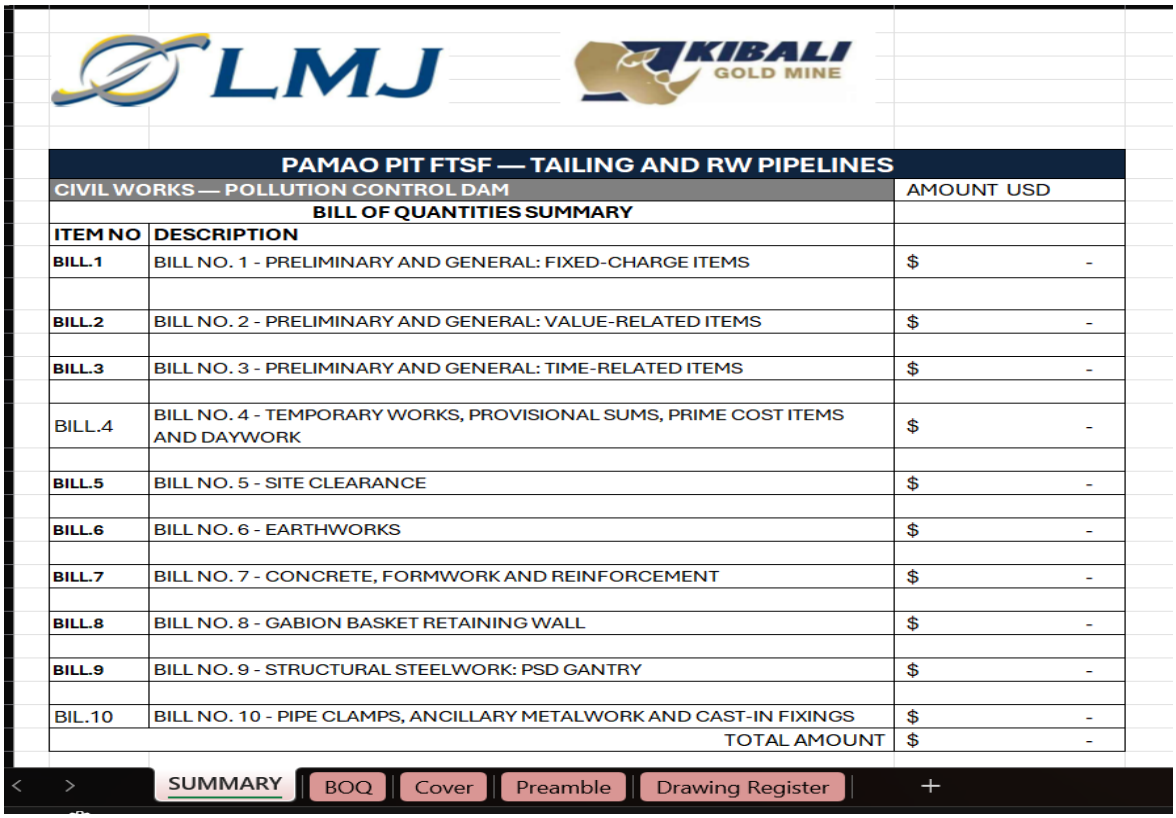

PAMAO PIT FTSF — TAILING AND RW PIPELINES		
CIVIL WORKS — POLLUTION CONTROL DAM		AMOUNT USD
BILL OF QUANTITIES SUMMARY		
ITEM NO	DESCRIPTION	
BILL.1	BILL NO. 1 - PRELIMINARY AND GENERAL: FIXED-CHARGE ITEMS	$ -
BILL.2	BILL NO. 2 - PRELIMINARY AND GENERAL: VALUE-RELATED ITEMS	$ -
BILL.3	BILL NO. 3 - PRELIMINARY AND GENERAL: TIME-RELATED ITEMS	$ -
BILL.4	BILL NO. 4 - TEMPORARY WORKS, PROVISIONAL SUMS, PRIME COST ITEMS AND DAYWORK	$ -
BILL.5	BILL NO. 5 - SITE CLEARANCE	$ -
BILL.6	BILL NO. 6 - EARTHWORKS	$ -
BILL.7	BILL NO. 7 - CONCRETE, FORMWORK AND REINFORCEMENT	$ -
BILL.8	BILL NO. 8 - GABION BASKET RETAINING WALL	$ -
BILL.9	BILL NO. 9 - STRUCTURAL STEELWORK: PSD GANTRY	$ -
BIL.10	BILL NO. 10 - PIPE CLAMPS, ANCILLARY METALWORK AND CAST-IN FIXINGS	$ -
	TOTAL AMOUNT	$ -

SUMMARY | BOQ | Cover | Preamble | Drawing Register

Images/drawings:
Drag and drop images from your files here…

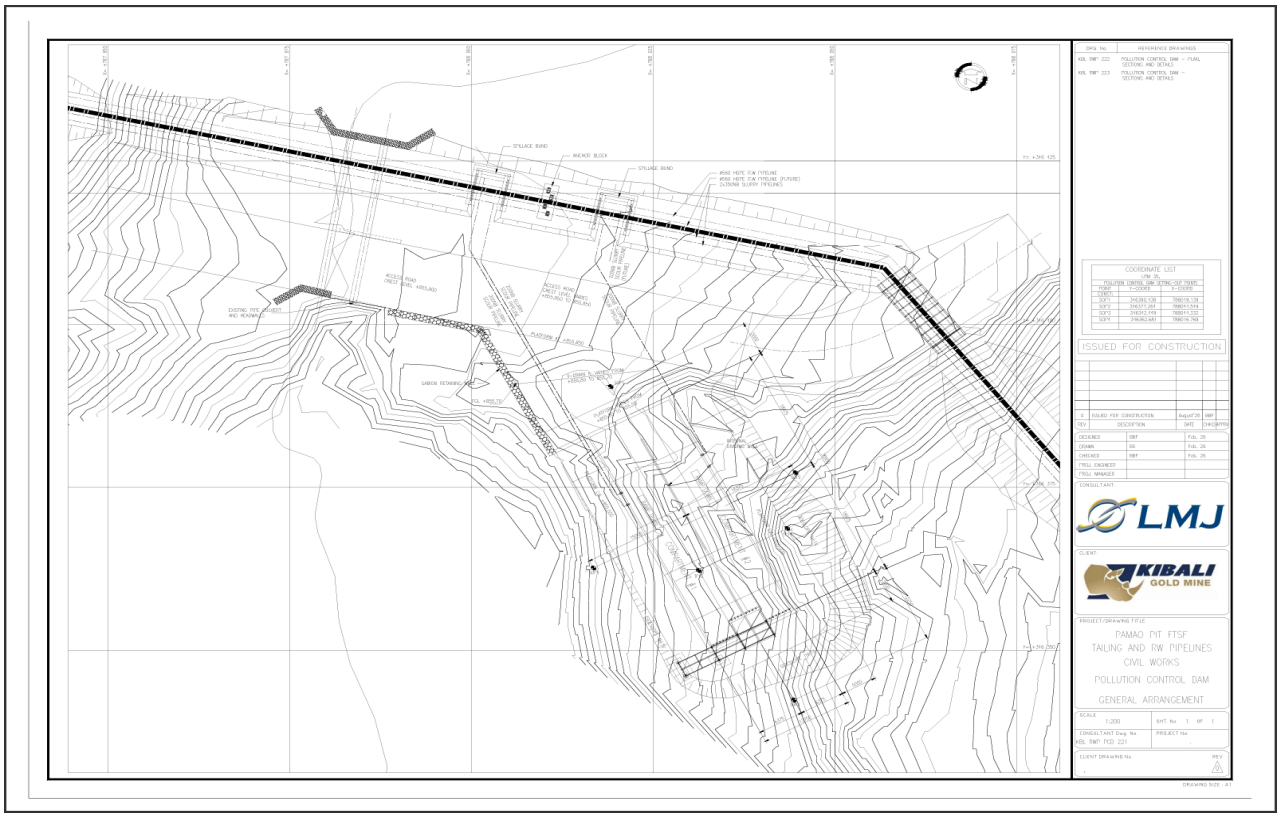

PAMAO PIT FTSF — TAILING AND RW PIPELINES			
CIVIL WORKS — POLLUTION CONTROL DAM		AMOUNT USD	
BILL OF QUANTITIES SUMMARY			
ITEM NO	DESCRIPTION		
BILL.1	BILL NO. 1 - PRELIMINARY AND GENERAL: FIXED-CHARGE ITEMS	$	-
BILL.2	BILL NO. 2 - PRELIMINARY AND GENERAL: VALUE-RELATED ITEMS	$	-
BILL.3	BILL NO. 3 - PRELIMINARY AND GENERAL: TIME-RELATED ITEMS	$	-
BILL.4	BILL NO. 4 - TEMPORARY WORKS, PROVISIONAL SUMS, PRIME COST ITEMS AND DAYWORK	$	-
BILL.5	BILL NO. 5 - SITE CLEARANCE	$	-
BILL.6	BILL NO. 6 - EARTHWORKS	$	-
BILL.7	BILL NO. 7 - CONCRETE, FORMWORK AND REINFORCEMENT	$	-
BILL.8	BILL NO. 8 - GABION BASKET RETAINING WALL	$	-
BILL.9	BILL NO. 9 - STRUCTURAL STEELWORK: PSD GANTRY	$	-
BIL.10	BILL NO. 10 - PIPE CLAMPS, ANCILLARY METALWORK AND CAST-IN FIXINGS	$	-
	TOTAL AMOUNT	$	-

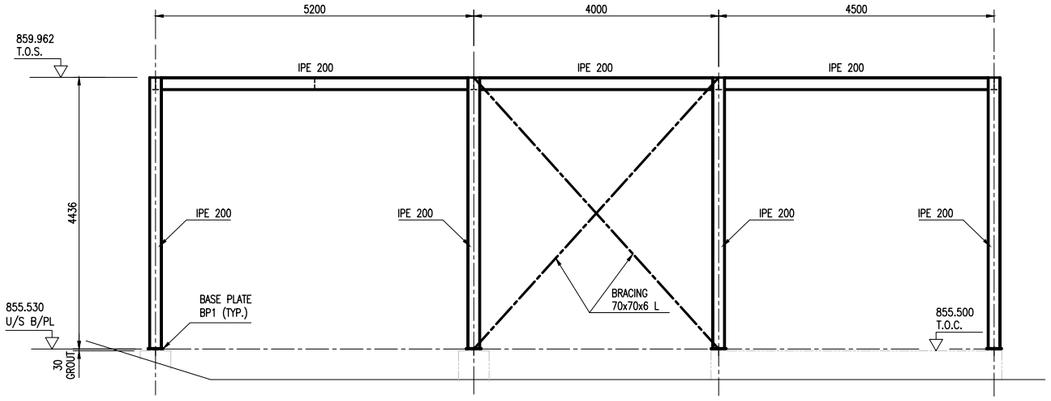

ELEVATION D
SCALE 1:50 (230)

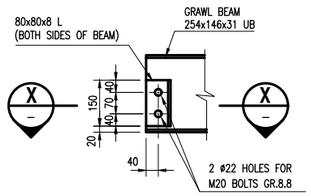

END STOP DETAIL
SCALE 1:10
(TYPICAL IN 2 PLACES)

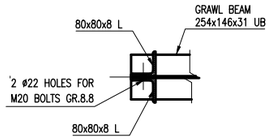

SECTION X
SCALE 1:10

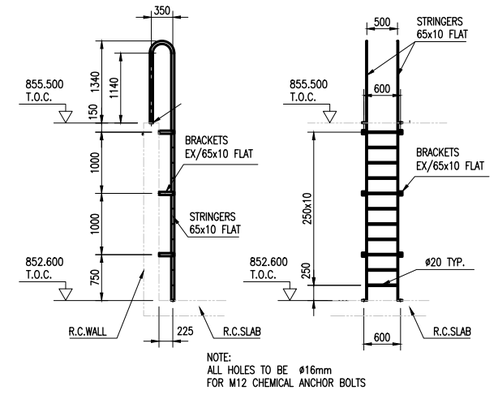

LADDER DETAILS
SCALE 1:50
(2 N° OFF)

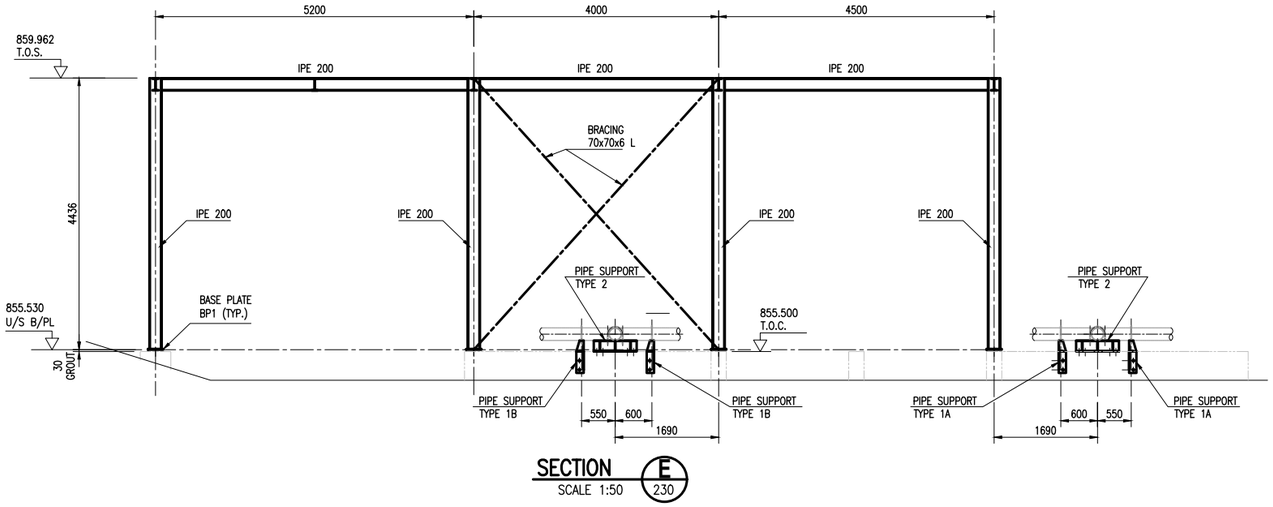

SECTION E
SCALE 1:50 (230)

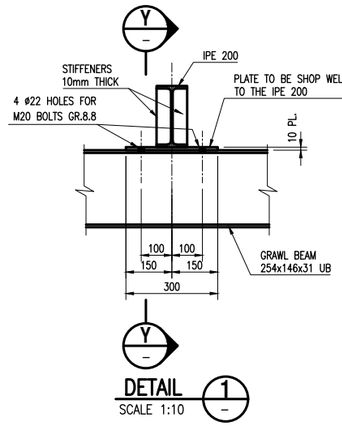

DETAIL 1
SCALE 1:10

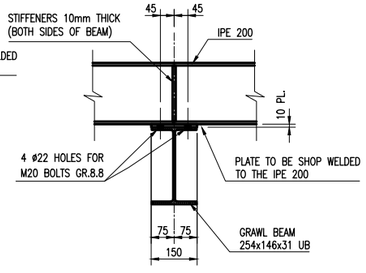

SECTION Y
SCALE 1:10

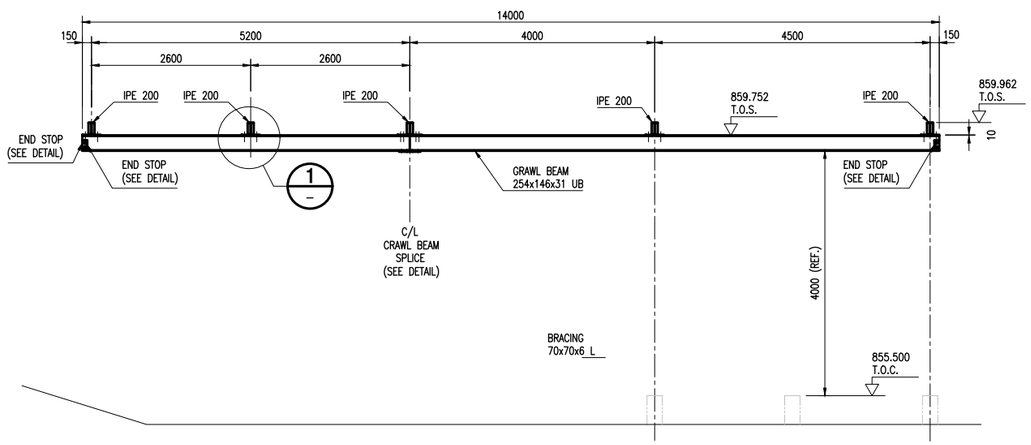

SECTION F
SCALE 1:50 (230)

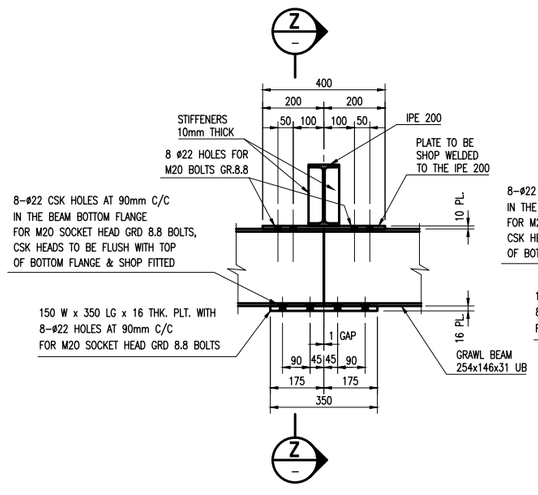

CRAWL BEAM SPLICE DETAIL
SCALE 1:10

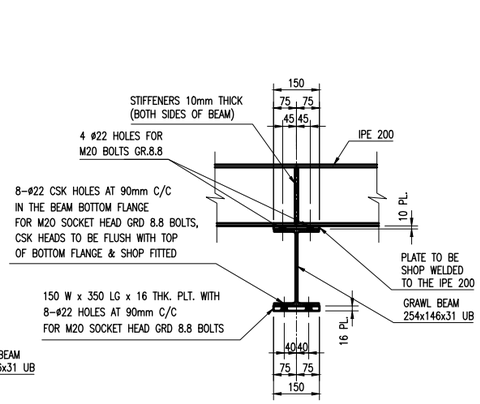

SECTION Z
SCALE 1:10

DRG. No.	REFERENCE DRAWINGS
KBL RWP 222	POLLUTION CONTROL DAM – PLAN, SECTIONS AND DETAILS
KBL RWP 223	POLLUTION CONTROL DAM – SECTIONS AND DETAILS
KBL RWP 230	POLLUTION CONTROL DAM – PSD GANTRY STEELWORK. SHEET 1

FOR GENERAL NOTES SEE DRG. N° KBL RWP 230

ISSUED FOR CONSTRUCTION

REV	DESCRIPTION	DATE	CHKD	APPRV
0	ISSUED FOR CONSTRUCTION	August'26	BBF	

DESIGNED	BBF	July'26
DRAWN	AFH	July'26
CHECKED	BBF	July'26
PROJ. ENGINEER		DATE
PROJ. MANAGER		DATE

CONSULTANT: LMJ

CLIENT: KIBALI GOLD MINE

PROJECT/DRAWING TITLE

PAMAO PIT FTSF
TAILING AND RW PIPELINES
CIVIL WORKS
POLLUTION CONTROL DAM
PSD GANTRY – STEELWORK
SHEET 2

SCALE	SHT. No.	OF
AS SHOWN	2	2

CONSULTANT Dwg No.	PROJECT No.
KBL RWP PCD 231	.

CLIENT DRAWING No.	REV
.	0

DRAWING SIZE : A1

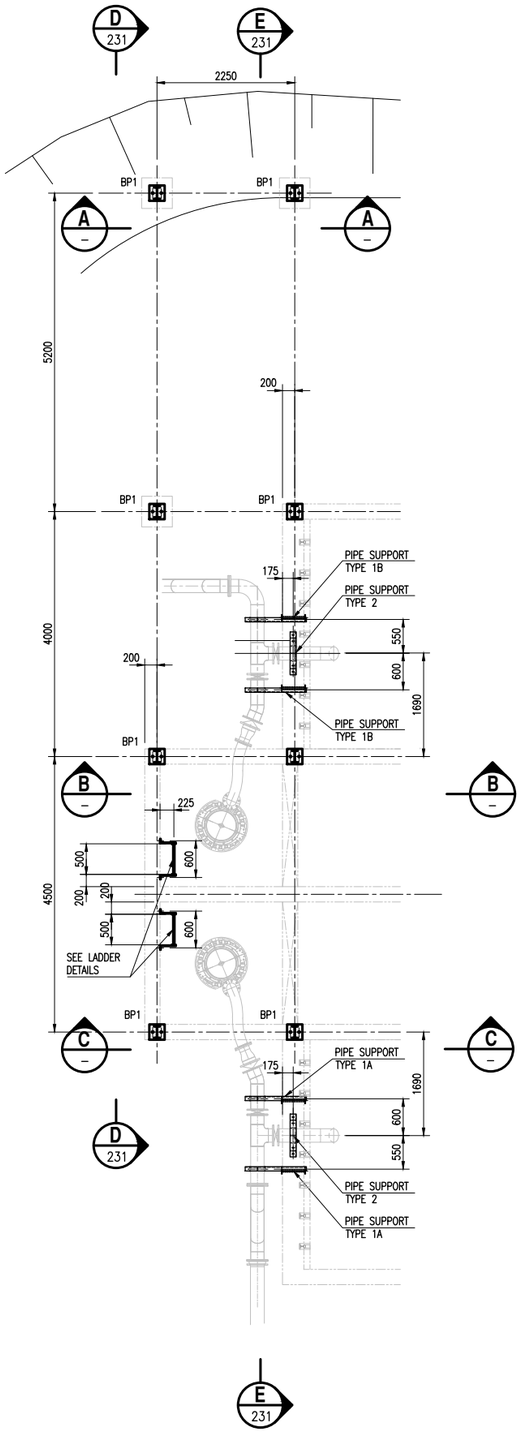

PLAN ON BASE PLATES

SCALE 1:50

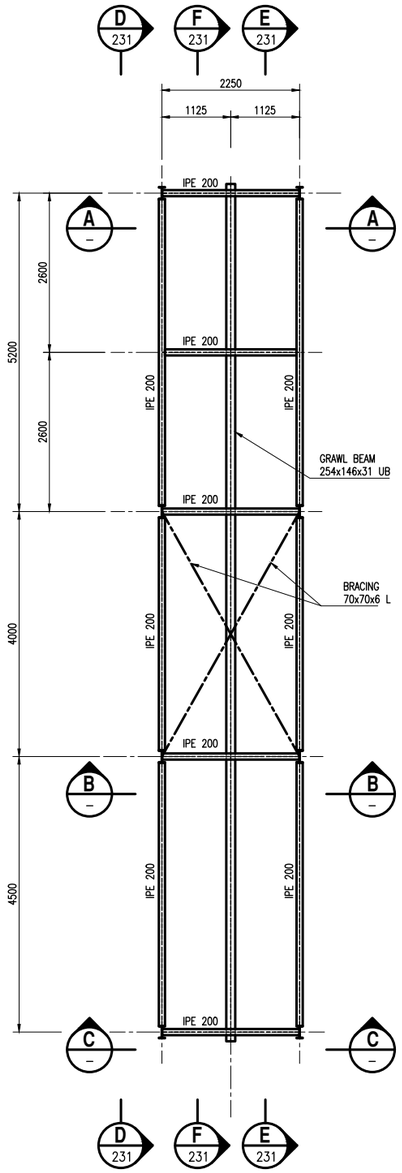

PLAN ON CRAWL BEAM SUPPORT STRUCTURE

SCALE 1:50

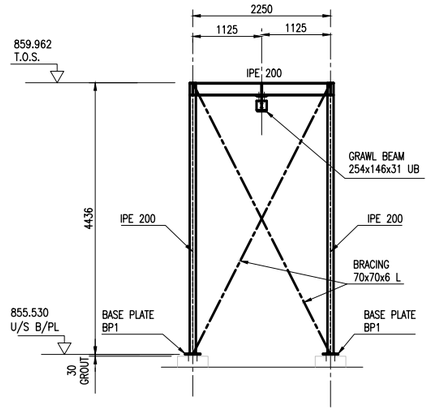

SECTION A

SCALE 1:50

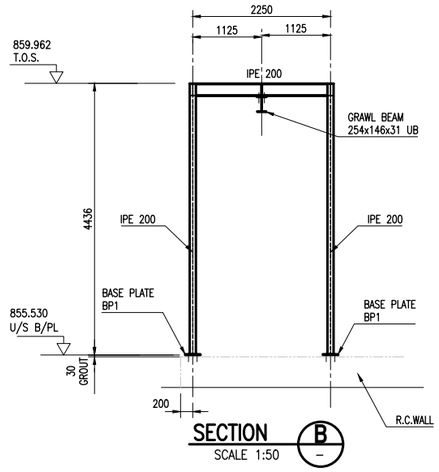

SECTION B

SCALE 1:50

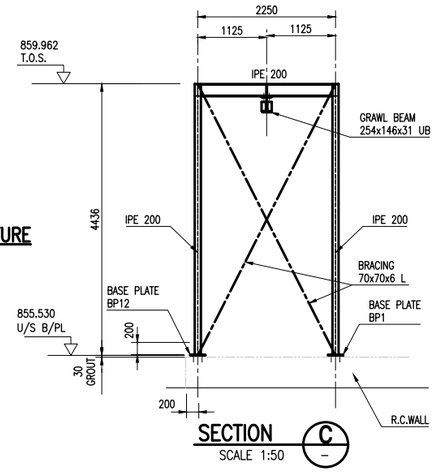

SECTION C

SCALE 1:50

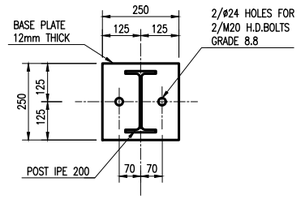

BASE PLATE BP1 DETAIL

(8 N° OFF)

SCALE 1:10

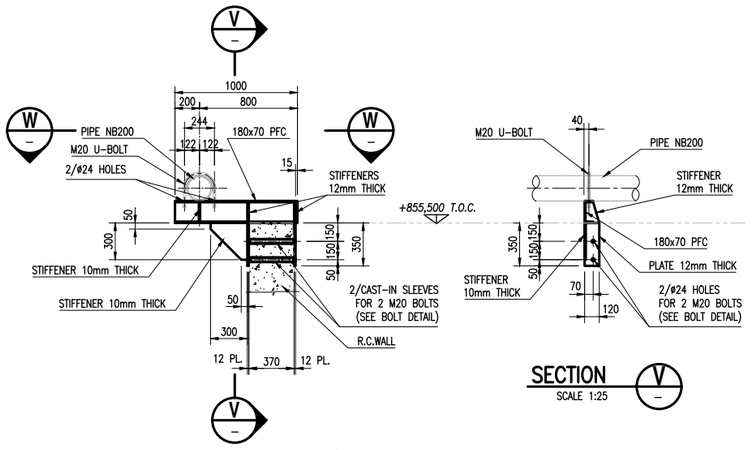

PIPE SUPPORT TYPE 1A/1B DETAIL

SCALE 1:25

(2 N° OFF TYPE 1A REQ'D AS SHOWN & 2 N° OFF TYPE 1B – MIRRORED)

SECTION V

SCALE 1:25

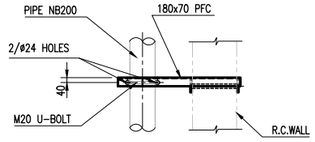

VIEW W

SCALE 1:25

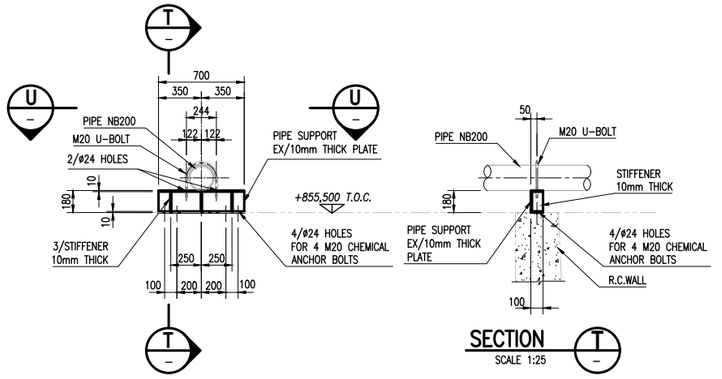

PIPE SUPPORT TYPE 2 DETAIL

SCALE 1:25

(2 N° OFF)

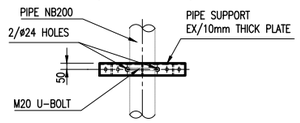

VIEW U

SCALE 1:25

NOTES:

1. BASE PLATE TO BE SHOP WELDED TO THE COLUMN (6mm C.F.W.)
2. GROUT UNDER BASE PLATE TO BE NON SHRINK CEMENTITIOUS GROUT CONBEXTRA GP OR SIMILAR APPROVED

DRG. No.	REFERENCE DRAWINGS
KBL RWP 222	POLLUTION CONTROL DAM – PLAN, SECTIONS AND DETAILS
KBL RWP 223	POLLUTION CONTROL DAM – SECTIONS AND DETAILS
KBL RWP 231	POLLUTION CONTROL DAM – PSD GANTRY STEELWORK, SHEET 2

GENERAL NOTES

1. STEELWORK SHALL BE IN ACCORDANCE WITH THE FOLLOWING SPECIFICATIONS:
   a) STRUCTURAL STEELWORK SANS 10162 PART 1 & SANS 2001 PART CS1 AND PROJECT SPECIFICATIONS 24 APPLICABLE
   b) HOT ROLLED SECTIONS EN 10025-2
   c) FABRICATION AND ERECTION SANS 1931 PART 3 & SANS 2001 PART CS1
2. STEELWORK TO BE GRADE S355JR (STEEL EN 10025-2-S355JR) HOLLOW SECTIONS STEEL WITH A YIELD STRESS OF 350 MPa TO SANS 657 PART 1
3. UNLESS INDICATED OTHERWISE ALL SITE SPLICES, MOMENT CONNECTIONS AND BUTT WELDS TO BE FULL STRENGTH
4. ALL BASES TO HAVE ø50 GROUTING HOLES
5. ALL BOLTS TO BE GRADE 8.8
6. TWO BOLTS MINIMUM PER CONNECTION FOR CHANNELS AND BRACING ONLY (ECCENTRIC LOADINGS MUST BE AVOIDED)
7. ALL BEAMS TO HAVE A MINIMUM OF 4 BOLTS PER CONNECTION
8. U.N.O. ALL WELDS TO BE 6mm CONTINUOUS FILLET
9. MINIMUM PLATE THICKNESS TO BE 8mm U.O.N.
10. END CONNECTION BOLTS TO BE EQUALLY SPACED ALONG END PLATE OR CLEAT
11. STEELWORK TO BE CORROSION PROTECTED TO KIBALI STANDARD SPECIFICATION EDC 9.2.1 SYSTEM 5
12. ALL SHOP DETAIL DRAWINGS MUST BE SUBMITTED FOR APPROVAL PRIOR TO FABRICATION
13. DETAIL DRAWINGS TO BE CO-ORDINATED WITH PURCHASER
14. HANDRAILING TO BE HS4A OR SIMILAR

ISSUED FOR CONSTRUCTION

REV	DESCRIPTION	DATE	CHKD	APPRV
0	ISSUED FOR CONSTRUCTION	August'26	BBF	

DESIGNED	BBF	July'26
DRAWN	AFH	July'26
CHECKED	BBF	July'26
PROJ. ENGINEER		DATE
PROJ. MANAGER		DATE

CONSULTANT: LMJ

CLIENT: KIBALI GOLD MINE

PROJECT/DRAWING TITLE

PAMAO PIT FTSF
TAILING AND RW PIPELINES
CIVIL WORKS
POLLUTION CONTROL DAM
PSD GANTRY – STEELWORK
SHEET 1

SCALE	SHT. No.	OF
AS SHOWN	1	2

CONSULTANT Dwg No.	PROJECT No.
KBL RWP PCD 230	.

CLIENT DRAWING No. .

REV 0

DRAWING SIZE : A1

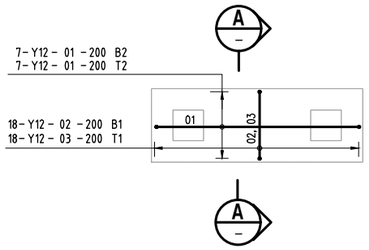

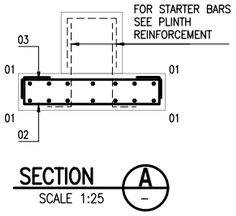

SECTION A
SCALE 1:25

PLAN ON FOUNDATION TYPE 1
SCALE 1:50

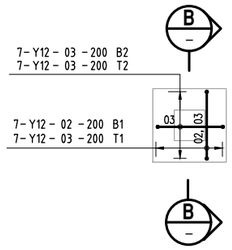

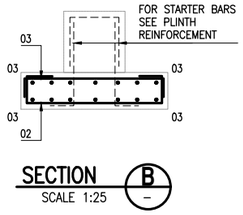

SECTION B
SCALE 1:25

PLAN ON FOUNDATION TYPE 2
SCALE 1:50

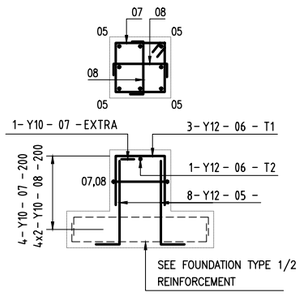

PLINTH 500mm SQ
SCALE 1:25
(3 N° OFF)

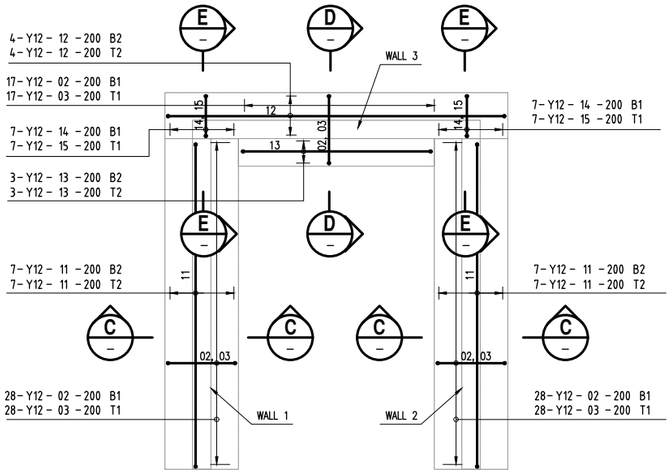

PLAN ON VALVE OPERATING AREA N° 1 AND 2 FOUNDATIONS
SCALE 1:50
(2 N° OFF)

NOTE:
FOR STARTER BARS SEE WALLS 1, 2 & 3 REINFORCEMENT

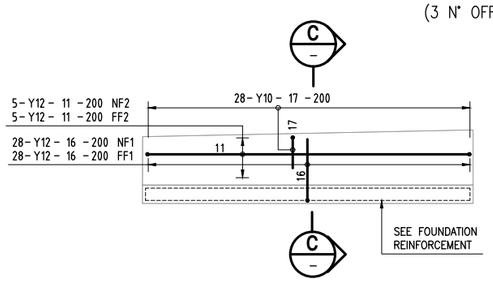

ELEVATION ON WALL 1 & 2
SCALE 1:50
(4 N° OFF)

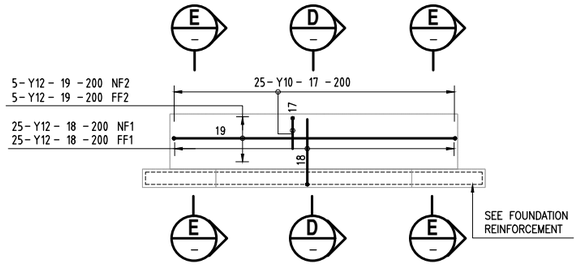

ELEVATION ON WALL 3
SCALE 1:50
(2 N° OFF)

BENDING SCHEDULE													
LOCATION/ MEMBER	NO. IN EACH	TYPE & SIZE	BAR MARK	TOTAL NO.	CUTTING LENGTH	TOTAL LENGTH	SHAPE CODE	BENDING DIMENSIONS TO SANS 282					
								A	B	C	D	E/R	
FOUNDATION TYPE 1	14	Y12	01	14	3600		38	150	3350				
	18	Y12	02	18	1800		55	200	200	1100	200		
	18	Y12	03	18	1350		38	150	1100				
FOUNDATION TYPE 2	7	Y12	02	7	1800		55	200	200	1100	200		
	21	Y12	03	21	1350		38	150	1100				
PLINTH 500mm SQ (3 N° OFF)	8	Y12	05	24	850		37	200					
	4	Y12	06	12	1150		38	400	370				
	5	Y10	07	15	1750		60	400	400				
	8	Y10	08	24	650		38	150	400				
VALVE OPERATING AREA N° 1 AND 2 FOUNDATIONS (2 N° OFF)	73	Y12	02	146	1800		55	200	200	1100	200		
	73	Y12	03	146	1350		38	150	1100				
	28	Y12	11	56	5550		38	150	5300				
	8	Y12	12	16	5750		38	150	5500				
	6	Y12	13	12	3350		38	150	3100				
	14	Y12	14	28	1350		55	200	200	650	200		
	14	Y12	15	28	900		38	150	650				
WALL 1 & 2 (4 N° OFF)	10	Y12	11	40	5550		38	150	5300				
	56	Y12	16	224	1350		37	350					
	28	Y10	17	112	1150		38	500	200				
WALL 3 (2 N° OFF)	25	Y10	17	50	1150		38	500	200				
	50	Y12	18	100	1500		37	350					
	10	Y12	19	20	4850		38	150	4600				
ANCHOR BLOCK	56	Y12	21	56	2350		38	250	1900				
	22	Y12	22	22	5750		38	250	5300				
	2	Y12	23	2	5850		38	300	5270				
	2	Y12	24	2	2450		38	300	1870				
	2	Y10	25	2	1750		83	400	350	400			
	2	Y10	26	2	1700		83	400	330	400			
	2	Y10	27	2	1650		83	400	310	400			
	2	Y10	28	2	1600		83	400	290	400			
	2	Y10	29	2	1550		83	400	270	400			
BARS MASS, KG					2110.0								

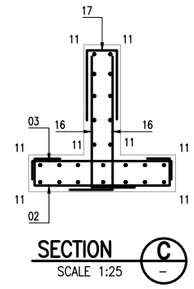

SECTION C
SCALE 1:25

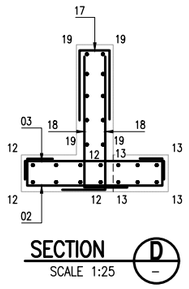

SECTION D
SCALE 1:25

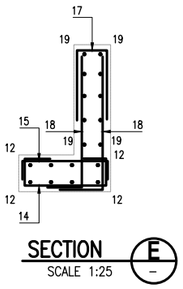

SECTION E
SCALE 1:25

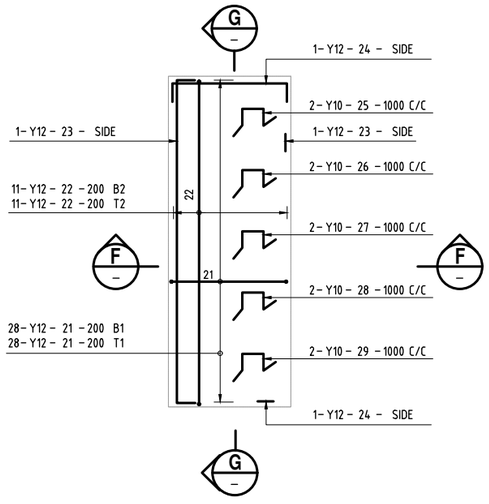

PLAN ON ANCHOR BLOCK
SCALE 1:50

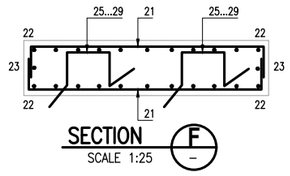

SECTION F
SCALE 1:25

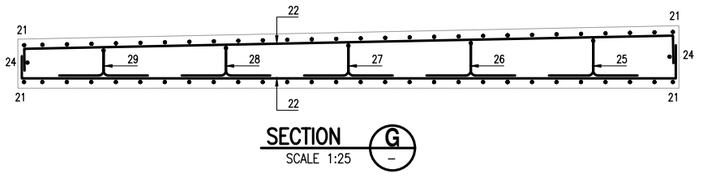

SECTION G
SCALE 1:25

REINFORCEMENT NOTES

1. CONCRETE COVER TO REINFORCEMENT 50mm (U.O.N)
2. ABBREVATIONS:
   - ALT - ALTERNATE
   - ABR - ALTERNATE BARS REVERSED
   - B1 - LOWEST LAYER OF BOTTOM REINFORCEMENT
   - B2 - SECOND LOWEST LAYER BOTTOM REINFORCEMENT
   - T1 - HIGHEST LAYER OF TOP REINFORCEMENT
   - T2 - SECOND HIGHEST LAYER OF TOP REINFORCEMENT
   - NF - NEAR FACE
   - FF - FAR FACE
   - EF - EACH FACE
   - EW - EACH WAY
   - STAG - STAGGERED
   - TOG - TOGETHER
   - C/C - CENTER TO CENTER
3. LAPS TO BE A MINIMUM OF 50 x BAR DIAMETER.

DRG. No.	REFERENCE DRAWINGS
KBL RWP PSD 222	POLLUTION CONTROL DAM – PLAN, SECTIONS AND DETAILS
KBL RWP PSD 224	POLLUTION CONTROL DAM – PLINTHS AND H.D.BOLTS
KBL RWP PSD 225	POLLUTION CONTROL DAM – ANCHOR BLOCKS
KBL RWP PSD 226	POLLUTION CONTROL DAM – ANCHOR BLOCKS

ISSUED FOR CONSTRUCTION

REV	DESCRIPTION	DATE	CHKD	APPRV
0	ISSUED FOR CONSTRUCTION	August'26	BBF	

DESIGNED	BBF	August' 26
DRAWN	AFH	August' 26
CHECKED	BBF	August' 26
PROJ. ENGINEER		DATE
PROJ. MANAGER		DATE

CONSULTANT:

LMJ

CLIENT:

KIBALI GOLD MINE

PROJECT/DRAWING TITLE

PAMAO PIT FTSF TAILING AND RW PIPELINES CIVIL WORKS

POLLUTION CONTROL DAM VALVE OPERATING AREA REINFORCEMENT DETAILS

SCALE: AS SHOWN	SHT. No. 1 OF 1
CONSULTANT Dwg No.: KBL RWP PCD 228	PROJECT No.: .
CLIENT DRAWING No.: .	REV: 0

DRAWING SIZE : A1

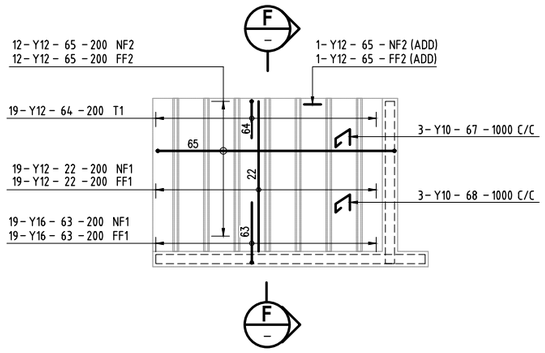

ELEVATION ON R.C.WALL W4 & W5

SCALE 1:50

(2 N° OFF REQ'D:
ONE AS SHOWN AND ONE OPPOSITE HAND)

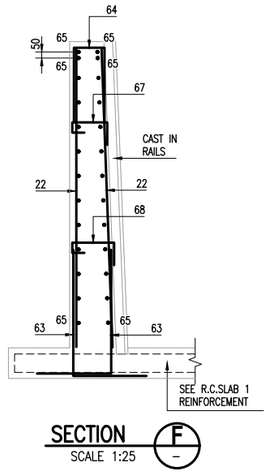

SECTION F

SCALE 1:25

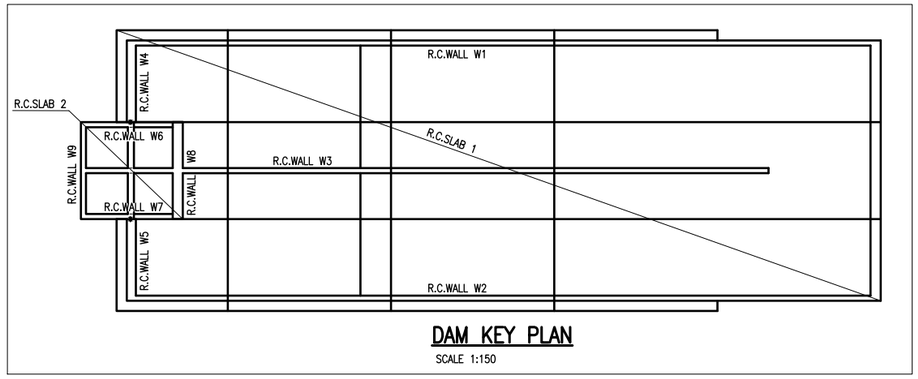

DAM KEY PLAN

SCALE 1:150

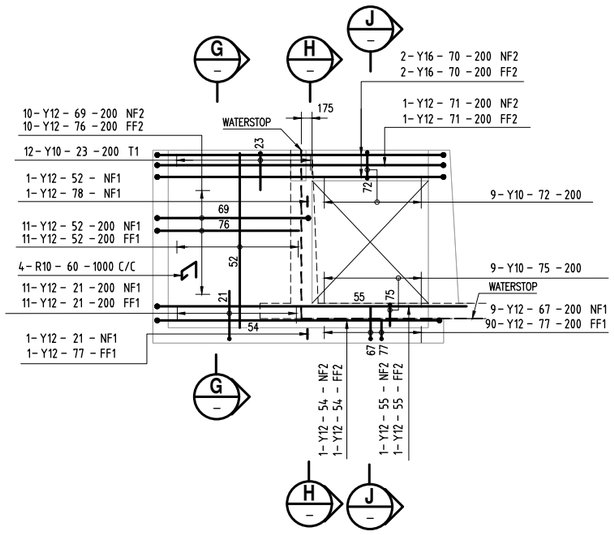

ELEVATION ON R.C.WALL W6 & W7

SCALE 1:50

(2 N° OFF REQ'D:
ONE AS SHOWN AND ONE OPPOSITE HAND)

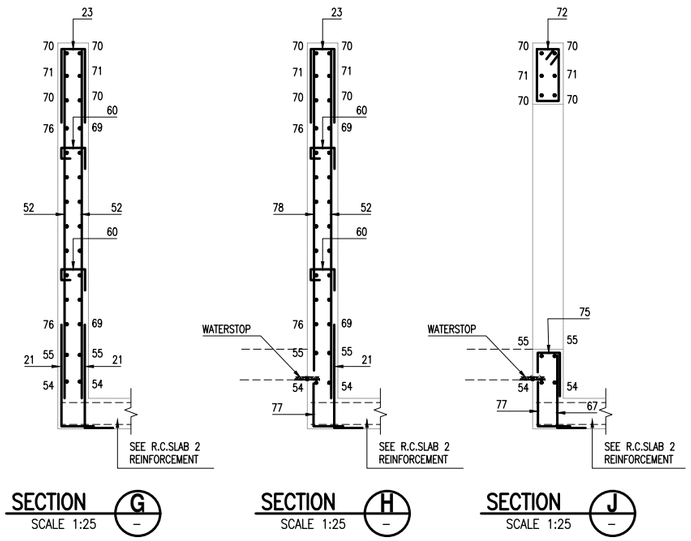

SECTION G

SCALE 1:25

SECTION H

SCALE 1:25

SECTION J

SCALE 1:25

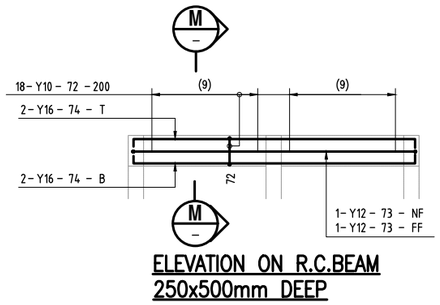

ELEVATION ON R.C.BEAM 250x500mm DEEP

SCALE 1:50

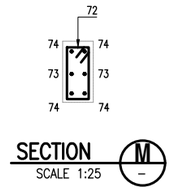

SECTION M

SCALE 1:25

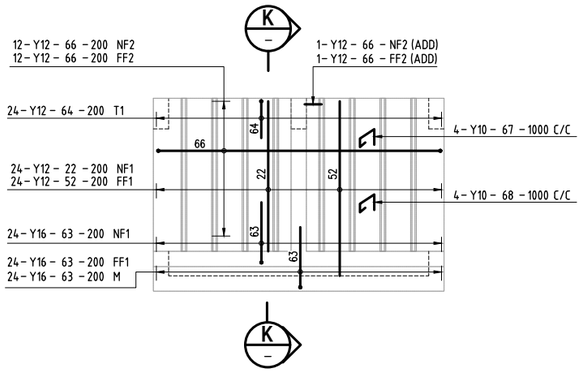

ELEVATION ON R.C.WALL W8

SCALE 1:50

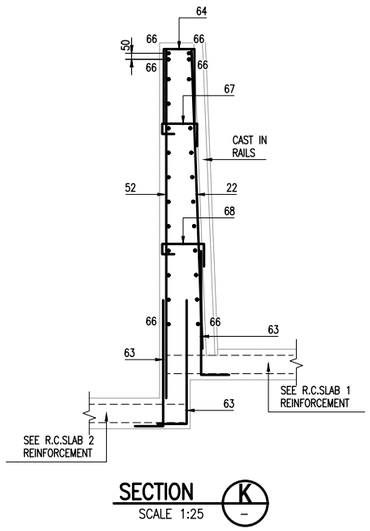

SECTION K

SCALE 1:25

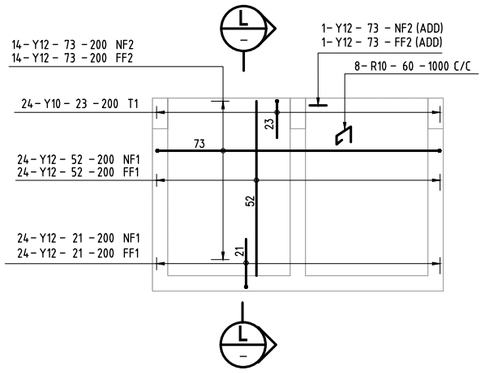

ELEVATION ON R.C.WALL W9

SCALE 1:50

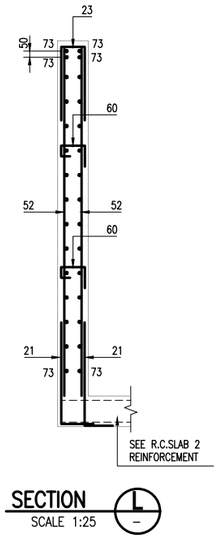

SECTION L

SCALE 1:25

DRG. No.	REFERENCE DRAWINGS
KBL RWP PSD 222	POLLUTION CONTROL DAM – PLAN, SECTIONS AND DETAILS
KBL RWP PSD 223	POLLUTION CONTROL DAM – SECTIONS AND DETAILS
KBL RWP PSD 224	POLLUTION CONTROL DAM – PLINTHS AND H.D.BOLTS
KBL RWP PSD 225	POLLUTION CONTROL DAM – ANCHOR BLOCKS
KBL RWP PSD 226	POLLUTION CONTROL DAM – ANCHOR BLOCKS
KBL RWP PSD 227	POLLUTION CONTROL DAM – REINFORCEMENT DETAILS – SHEET 1–4
KBL RWP PSD 227	POLLUTION CONTROL DAM – REINFORCEMENT DETAILS – SHEET 2–4
KBL RWP PSD 227	POLLUTION CONTROL DAM – REINFORCEMENT DETAILS – SHEET 4–4

REINFORCEMENT NOTES

1. CONCRETE COVER TO REINFORCEMENT 50mm (U.O.N)
2. ABBREVATIONS:
   - ALT - ALTERNATE
   - ABR - ALTERNATE BARS REVERSED
   - B1 - LOWEST LAYER OF BOTTOM REINFORCEMENT
   - B2 - SECOND LOWEST LAYER BOTTOM REINFORCEMENT
   - T1 - HIGHEST LAYER OF TOP REINFORCEMENT
   - T2 - SECOND HIGHEST LAYER OF TOP REINFORCEMENT
   - NF - NEAR FACE
   - FF - FAR FACE
   - EF - EACH FACE
   - EW - EACH WAY
   - STAG - STAGGERED
   - TOG - TOGETHER
   - C/C - CENTER TO CENTER
3. LAPS TO BE A MINIMUM OF 50 x BAR DIAMETER.

ISSUED FOR CONSTRUCTION

REV	DESCRIPTION	DATE	CHKD	APPRV
0	ISSUED FOR CONSTRUCTION	August'26	BBF	

DESIGNED	BBF	July' 26
DRAWN	AFH	July' 26
CHECKED	BBF	July' 26
PROJ. ENGINEER		DATE
PROJ. MANAGER		DATE

CONSULTANT:

LMJ

CLIENT:

KIBALI GOLD MINE

PROJECT/DRAWING TITLE

PAMAO PIT FTSF
TAILING AND RW PIPELINES
CIVIL WORKS

POLLUTION CONTROL DAM
REINFORCEMENT DETAILS
SHEET 3–4

SCALE: AS SHOWN	SHT. No. 3 OF 4
CONSULTANT Dwg No.: KBL RWP PCD 227	PROJECT No.: .
CLIENT DRAWING No.: .	REV: 0

DRAWING SIZE : A1

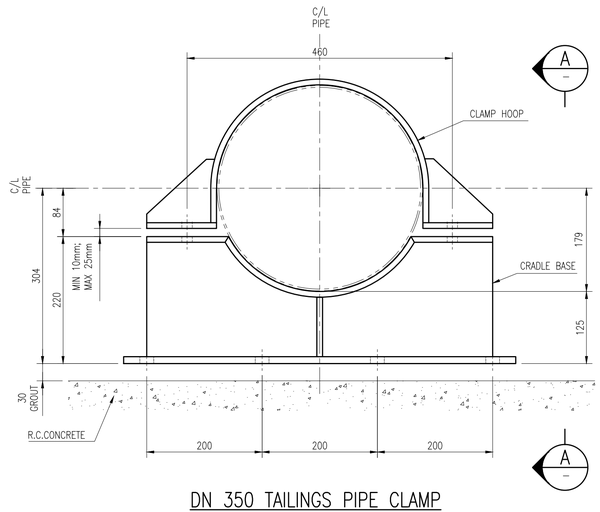

DN 350 TAILINGS PIPE CLAMP GENERAL ASSEMBLY

SCALE: 1:5

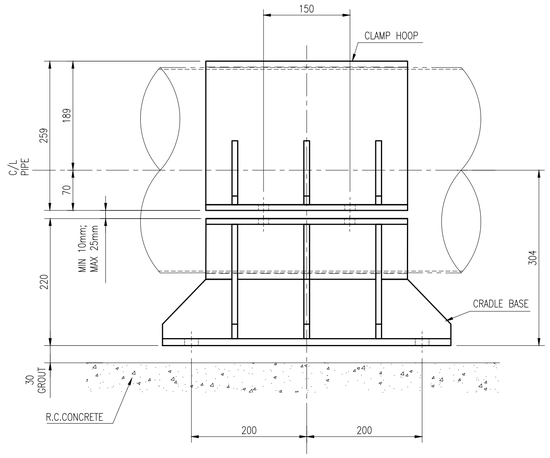

VIEW A

SCALE 1:50

NOTES:

- ALL DIMENSIONS IN MILLIMETERS UNLESS OTHERWISE NOTED.
- ALL WELDED CONSTRUCTION UNLESS OTHERWISE NOTED.
- UNLESS OTHERWISE NOTED ALL WELDS FULL AND 6mm CONTINUOUS FILLET WELDS

FASTENER NOTES:

- ALL BASES TO BE FIXED WITH M20 CHEMICAL ANCHORS PROVIDED WITH NUT AND WASHER (TO BE SUPPLIED BY CONTRACTOR). MINIMUM EMBEDMENT DEPTH ACCORDING TO TO CHEMICAL ANCHOR SUPPLIER'S SPECIFICATION
- HEXAGON HEAD BOLTS, NUTS AND WASHERS SUPPLIED BY FABRICATOR.
- BOLTS, NUTS AND WASHERS TO BE GRADE 8.8, UNLESS OTHERWISE NOTED
- ALL FASTENERS TO BE HOT DIPPED GALVANIZED, NUTS SHALL BE THREADED OVERSIZE AFTER GALVANIZING TO CLEAN THREADS
- AFTER ASSEMBLY BOLTS TO PROTRUDE A MINIMUM OF FOUR THREADS PAST NUTS

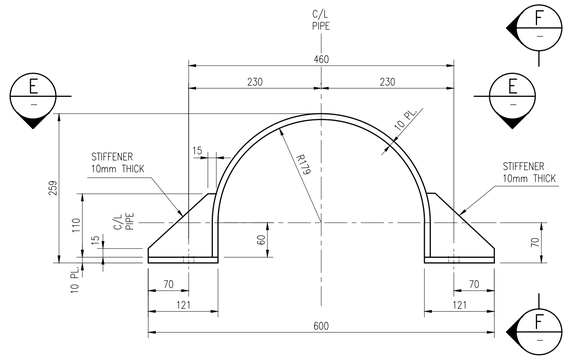

ELEVATION ON CLAMP HOOP

SCALE: 1:5

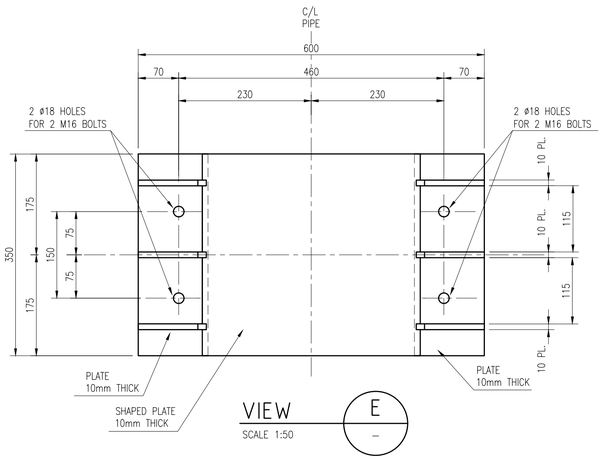

VIEW E

SCALE 1:50

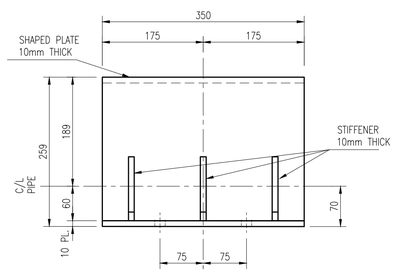

VIEW F

SCALE 1:50

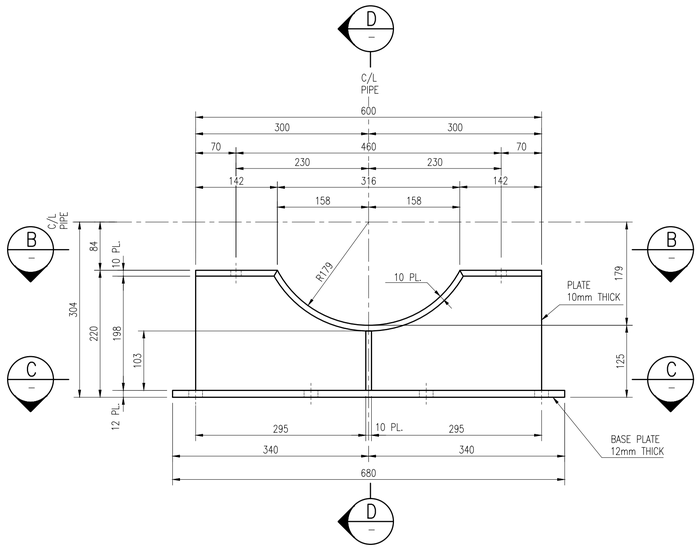

ELEVATION ON CRADLE BASE

SCALE: 1:5

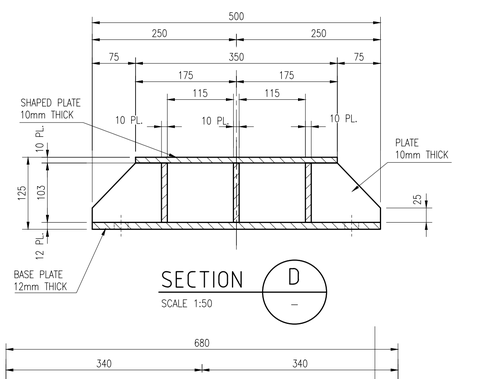

SECTION D

SCALE 1:50

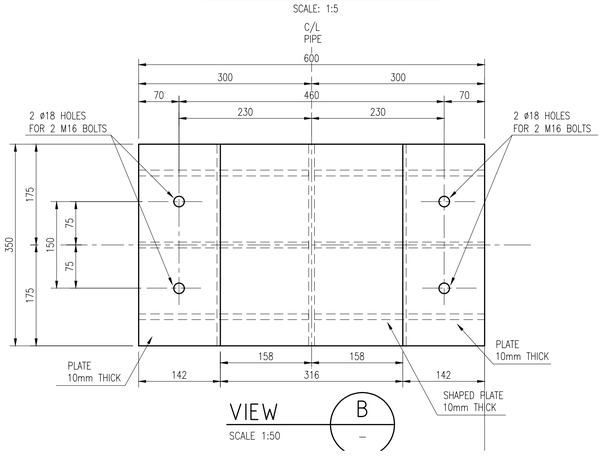

VIEW B

SCALE 1:50

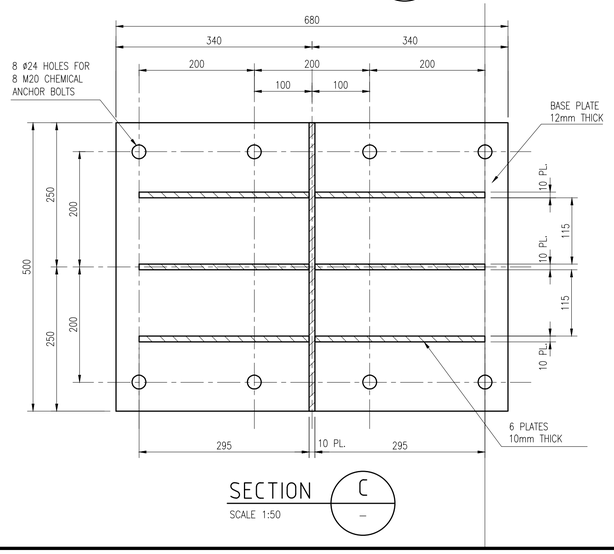

SECTION C

SCALE 1:50

DRG. No.	REFERENCE DRAWINGS
.	

GENERAL NOTES

1. STEELWORK SHALL BE IN ACCORDANCE WITH THE FOLLOWING SPECIFICATIONS:
   a) STRUCTURAL STEELWORK SANS 10162 PART 1 & SANS 2001 PART CS1 AND PROJECT SPECIFICATIONS 24 APPLICABLE
   b) HOT ROLLED SECTIONS EN 10025-2
   c) FABRICATION AND ERECTION SANS 1931 PART 3 & SANS 2001 PART CS1
2. STEELWORK TO BE GRADE S355JR (STEEL EN 10025-2-S355JR) HOLLOW SECTIONS STEEL WITH A YIELD STRESS OF 350 MPa TO SANS 657 PART 1
3. UNLESS INDICATED OTHERWISE ALL SITE SPLICES, MOMENT CONNECTIONS AND BUTT WELDS TO BE FULL STRENGTH
4. ALL BASES TO HAVE ø50 GROUTING HOLES
5. ALL BOLTS TO BE GRADE 8.8
6. TWO BOLTS MINIMUM PER CONNECTION FOR CHANNELS AND BRACING ONLY (ECCENTRIC LOADINGS MUST BE AVOIDED)
7. ALL BEAMS TO HAVE A MINIMUM OF 4 BOLTS PER CONNECTION
8. U.N.O. ALL WELDS TO BE 6mm CONTINUOUS FILLET
9. MINIMUM PLATE THICKNESS TO BE 8mm U.O.N.
10. END CONNECTION BOLTS TO BE EQUALLY SPACED ALONG END PLATE OR CLEAT
11. ALL STWK TO BE HOT DIP GALVANIZED TO SANS 121 STANDARD
12. ALL SHOP DETAIL DRAWINGS MUST BE SUBMITTED FOR APPROVAL PRIOR TO FABRICATION
13. DETAIL DRAWINGS TO BE CO-ORDINATED WITH PURCHASER
14. HANDRAILING TO BE HOT DEEP GALVANIZED HS4A OR SIMILAR

ISSUED FOR CONSTRUCTION

REV	DESCRIPTION	DATE	CHKD	APPRV
0	ISSUED FOR CONSTRUCTION	August'26	BBF	

DESIGNED	BBF	March 26
DRAWN	AFH	March 26
CHECKED	BBF	March 26
PROJ. ENGINEER		DATE
PROJ. MANAGER		DATE

CONSULTANT:

LMJ

CLIENT:

KIBALI GOLD MINE

PROJECT/DRAWING TITLE

PAMAO PIT FTSF TAILINGS
TAILING AND RW PIPELINES
CIVIL WORKS

DN 350 TAILINGS PIPE CLAMP
STRUCTURAL DETAIL

SCALE	SHT. No. 1 OF 1
AS SHOWN	
CONSULTANT Dwg. No.	PROJECT No.
KBL RWP PCD 035	.

CLIENT DRAWING No.: .

REV: 0

DRAWING SIZE : A1

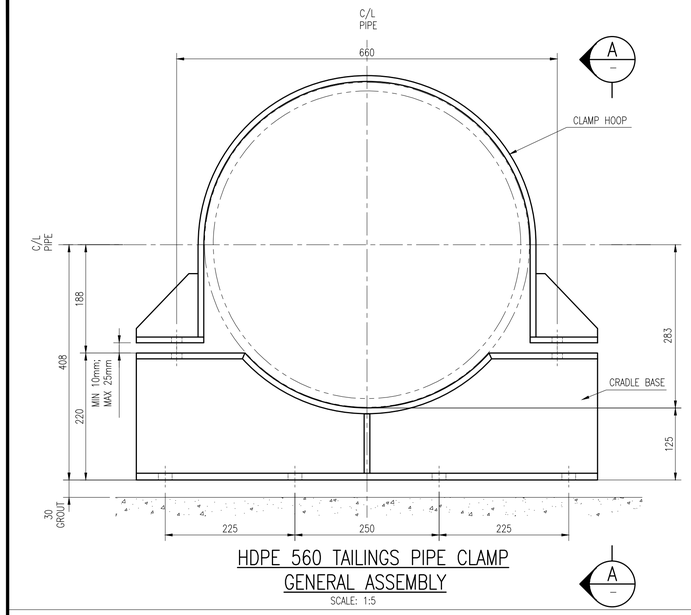

HDPE 560 TAILINGS PIPE CLAMP GENERAL ASSEMBLY

SCALE: 1:5

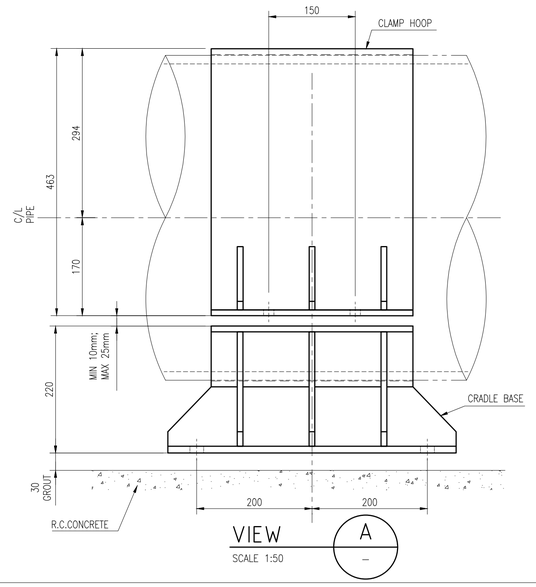

VIEW A

SCALE 1:50

NOTES:

- ALL DIMENSIONS IN MILLIMETERS UNLESS OTHERWISE NOTED.
- ALL WELDED CONSTRUCTION UNLESS OTHERWISE NOTED.
- UNLESS OTHERWISE NOTED ALL WELDS FULL AND 6mm CONTINUOUS FILLET WELDS

FASTENER NOTES:

- ALL BASES TO BE FIXED WITH M20 CHEMICAL ANCHORS PROVIDED WITH NUT AND WASHER (TO BE SUPPLIED BY CONTRACTOR). MINIMUM EMBEDMENT DEPTH ACCORDING TO TO CHEMICAL ANCHOR SUPPLIER'S SPECIFICATION
- HEXAGON HEAD BOLTS, NUTS AND WASHERS SUPPLIED BY FABRICATOR.
- BOLTS, NUTS AND WASHERS TO BE GRADE 8.8, UNLESS OTHERWISE NOTED
- ALL FASTENERS TO BE HOT DIPPED GALVANIZED, NUTS SHALL BE THREADED OVERSIZE AFTER GALVANIZING TO CLEAN THREADS
- AFTER ASSEMBLY BOLTS TO PROTRUDE A MINIMUM OF FOUR THREADS PAST NUTS

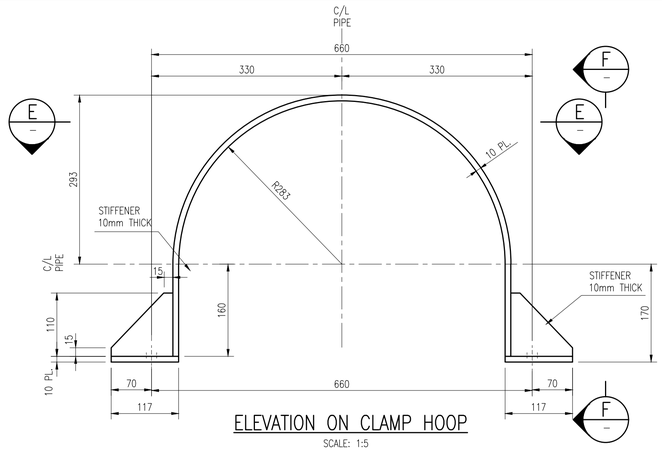

ELEVATION ON CLAMP HOOK

SCALE: 1:5

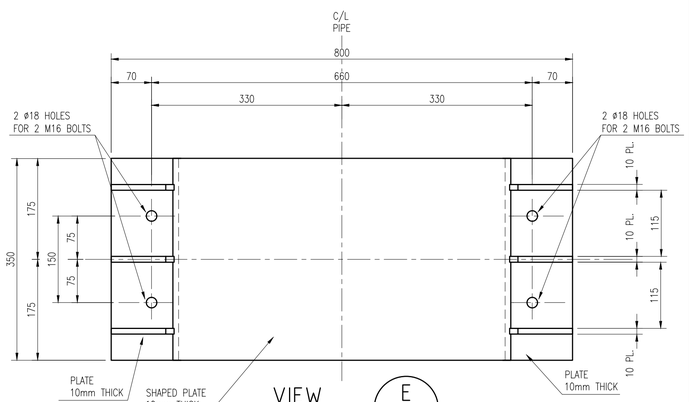

VIEW E

SCALE 1:50

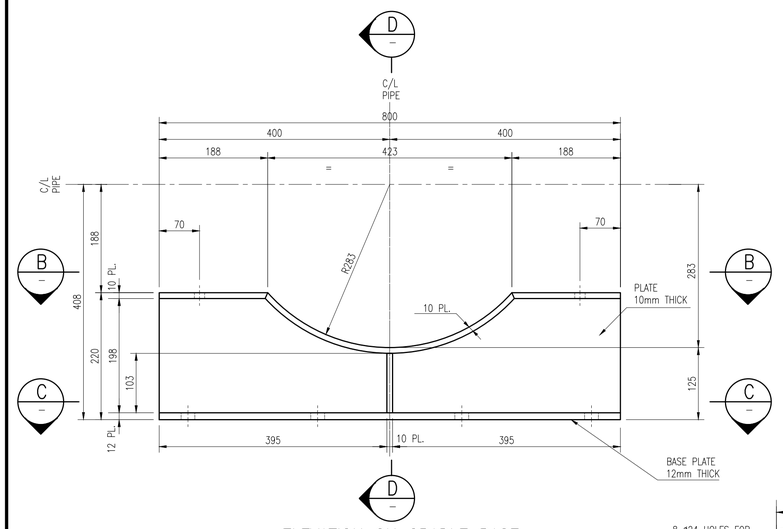

ELEVATION ON CRADLE BASE

SCALE: 1:5

SECTION D

SCALE 1:50

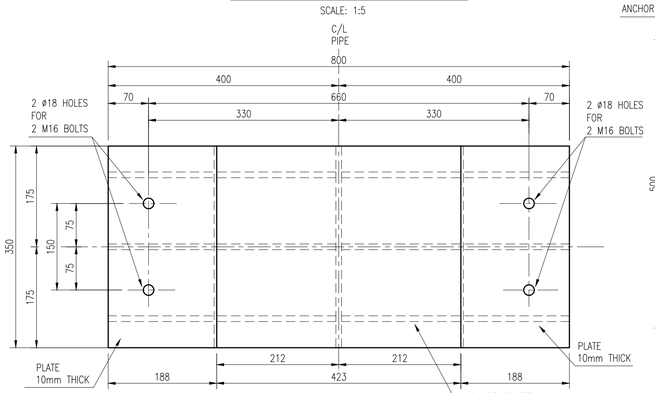

VIEW B

SCALE 1:50

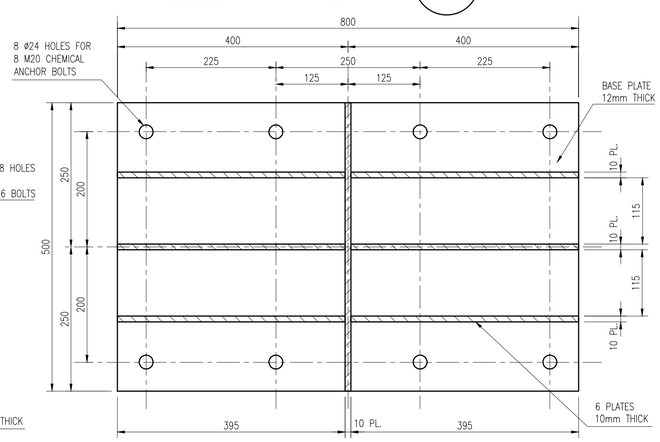

SECTION C

SCALE 1:50

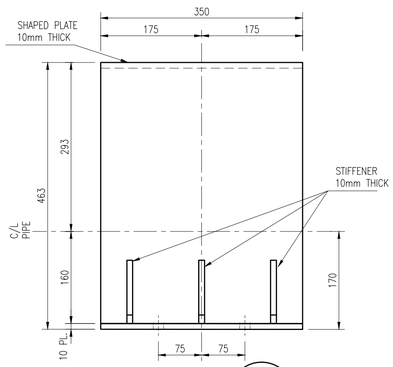

VIEW F

SCALE 1:50

DRG. No.	REFERENCE DRAWINGS
.	

GENERAL NOTES

1. STEELWORK SHALL BE IN ACCORDANCE WITH THE FOLLOWING SPECIFICATIONS:
   a) STRUCTURAL STEELWORK SANS 10162 PART 1 & SANS 2001 PART CS1 AND PROJECT SPECIFICATIONS 24 APPLICABLE
   b) HOT ROLLED SECTIONS EN 10025-2
   c) FABRICATION AND ERECTION SANS 1931 PART 3 & SANS 2001 PART CS1
2. STEELWORK TO BE GRADE S355JR (STEEL EN 10025-2-S355JR) HOLLOW SECTIONS STEEL WITH A YIELD STRESS OF 350 MPa TO SANS 657 PART 1
3. UNLESS INDICATED OTHERWISE ALL SITE SPLICES, MOMENT CONNECTIONS AND BUTT WELDS TO BE FULL STRENGTH
4. ALL BASES TO HAVE ø50 GROUTING HOLES
5. ALL BOLTS TO BE GRADE 8.8
6. TWO BOLTS MINIMUM PER CONNECTION FOR CHANNELS AND BRACING ONLY (ECCENTRIC LOADINGS MUST BE AVOIDED)
7. ALL BEAMS TO HAVE A MINIMUM OF 4 BOLTS PER CONNECTION
8. U.N.O. ALL WELDS TO BE 6mm CONTINUOUS FILLET
9. MINIMUM PLATE THICKNESS TO BE 8mm U.O.N.
10. END CONNECTION BOLTS TO BE EQUALLY SPACED ALONG END PLATE OR CLEAT
11. ALL STWK TO BE HOT DIP GALVANIZED TO SANS 121 STANDARD
12. ALL SHOP DETAIL DRAWINGS MUST BE SUBMITTED FOR APPROVAL PRIOR TO FABRICATION
13. DETAIL DRAWINGS TO BE CO-ORDINATED WITH PURCHASER
14. HANDRAILING TO BE HOT DEEP GALVANIZED HS4A OR SIMILAR

ISSUED FOR CONSTRUCTION

REV	DESCRIPTION	DATE	CHKD	APPRV
0	ISSUED FOR CONSTRUCTION	August'26	BBF	

DESIGNED	BBF	March 26
DRAWN	AFH	March 26
CHECKED	BBF	March 26
PROJ. ENGINEER		DATE
PROJ. MANAGER		DATE

CONSULTANT:

LMJ

CLIENT:

KIBALI GOLD MINE

PROJECT/DRAWING TITLE

PAMAO PIT FTSF TAILINGS
TAILING AND RW PIPELINES
CIVIL WORKS

HDPE 560 TAILINGS PIPE CLAMP
STRUCTURAL DETAIL

SCALE	SHT. No. 1 OF 1
AS SHOWN	
CONSULTANT Dwg. No.	PROJECT No.
KBL RWP PCD 037	.

CLIENT DRAWING No.: .

REV: 0

DRAWING SIZE : A1

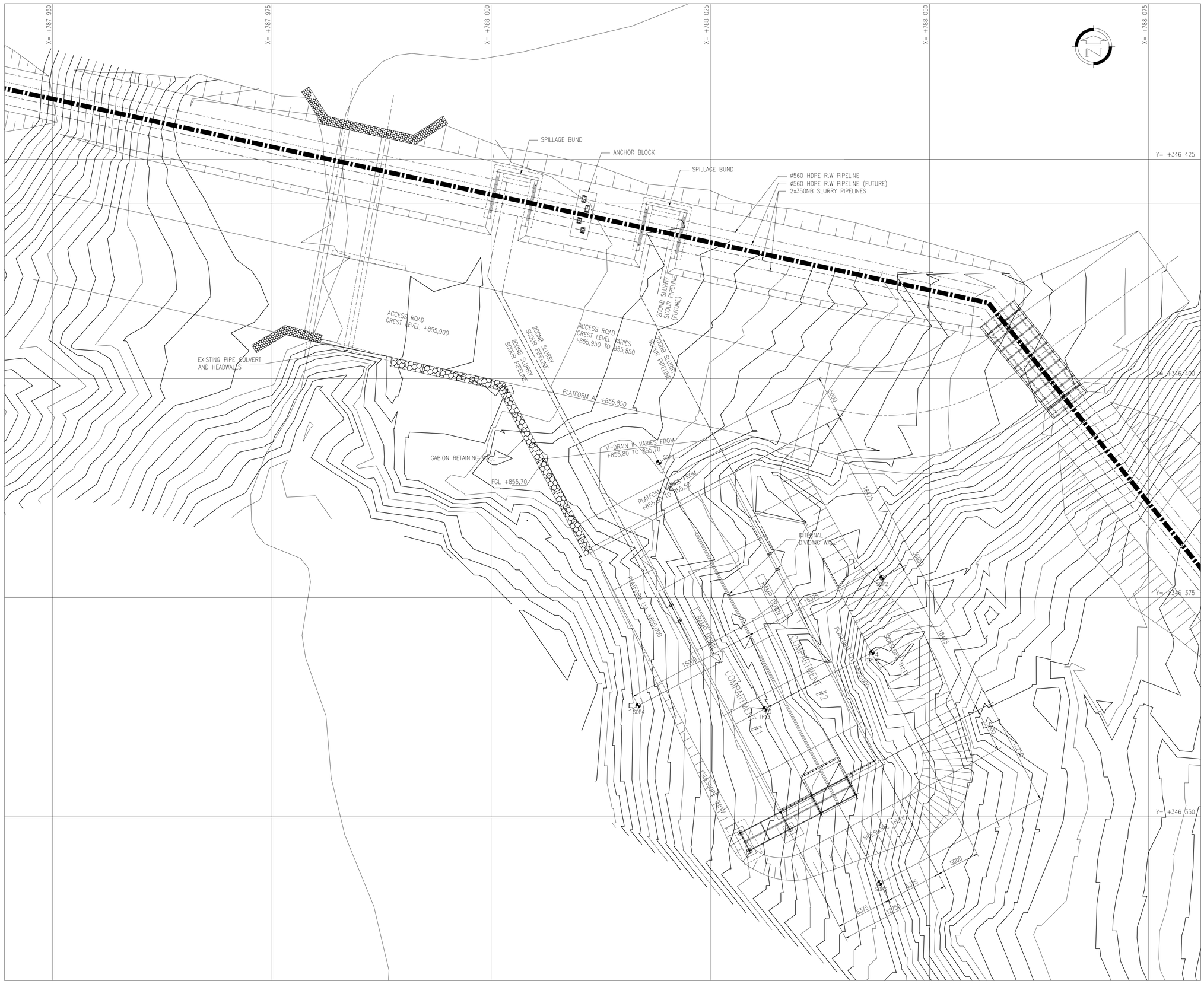
X= +787 950
X= +787 975
X= +788 000
X= +788 025
X= +788 050
X= +788 075
Y= +346 425
Y= +346 400
Y= +346 375
Y= +346 350
SPILLAGE BUND
ANCHOR BLOCK
SPILLAGE BUND
Ø560 HDPE R.W PIPELINE
Ø560 HDPE R.W PIPELINE (FUTURE)
2x350NB SLURRY PIPELINES
200NB SLURRY SCOUR PIPELINE (FUTURE)
ACCESS ROAD CREST LEVEL +855,900
ACCESS ROAD CREST LEVEL VARIES +855,950 TO +855,850
200NB SLURRY SCOUR PIPELINE
200NB SLURRY SCOUR PIPELINE
200NB SLURRY SCOUR PIPELINE
EXISTING PIPE CULVERT AND HEADWALLS
PLATFORM A1 +855,850
GABION RETAINING WALL
FGL +855,70
V-DRAIN 1L VARIES FROM +855,80 TO 855,70
SOP1
PLATFORM A1 VARIES FROM +855,80 TO 855,50
INTERNAL DIVIDING WALL
RAMP DOWN
RAMP DOWN
PLATFORM A4 +855,000
1650
1500
COMPARTMENT #1
COMPARTMENT #2
SOP4
TP15
SOP2
TP14
1:4H:1V
1:3H:1V
1:3H:1V
1:3

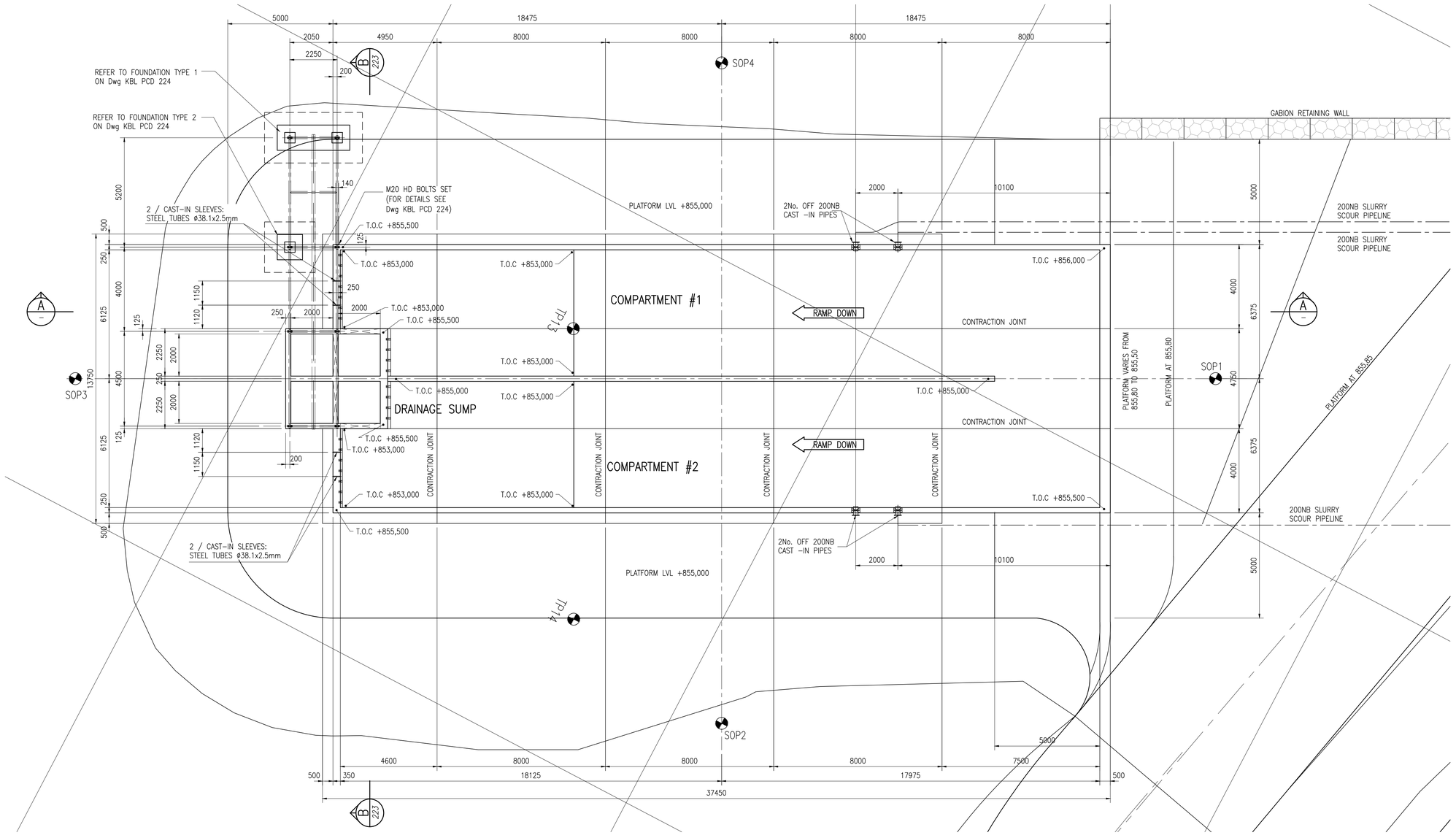

PLAN VIEW ON POLLUTION CONTROL DAM

SCALE :100

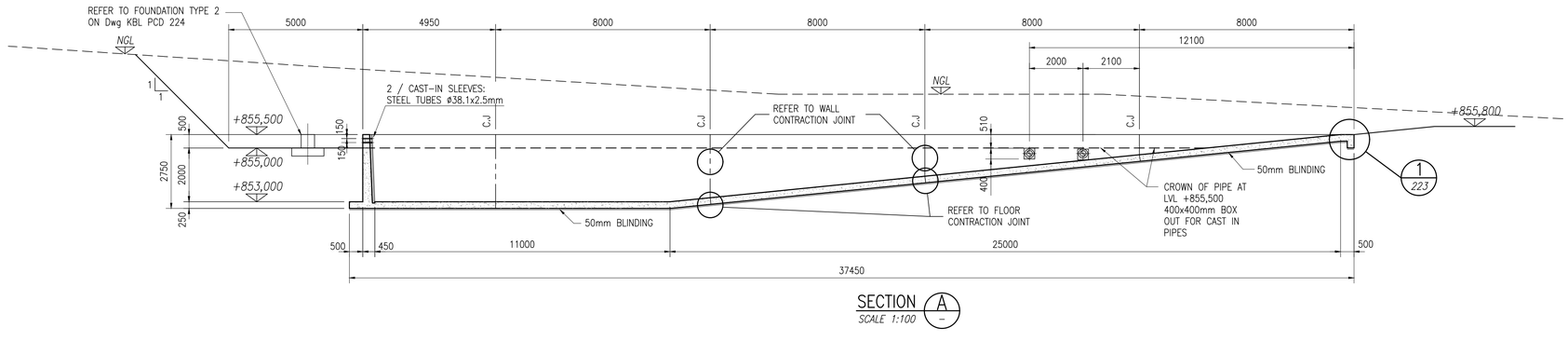

SECTION A

SCALE 1:100

DRG. No.	REFERENCE DRAWINGS
KBL RWP 223	POLLUTION CONTROL DAM – SECTIONS AND DETAILS
KBL RWP 224	POLLUTION CONTROL DAM – PLINTHS AND H.D.BOLTS

ISSUED FOR CONSTRUCTION

REV	DESCRIPTION	DATE	CHKD	APPR'D
0	ISSUED FOR CONSTRUCTION	August'26	BBF	

DESIGNED	BBF	Feb. 26
DRAWN	BG	Feb. 26
CHECKED	BBF	Feb. 26
PROJ. ENGINEER		
PROJ. MANAGER		

CONSULTANT: LMJ

CLIENT: KIBALI GOLD MINE

PROJECT/DRAWING TITLE

PAMAO PIT FTSF
TAILING AND RW PIPELINES
CIVIL WORKS

POLLUTION CONTROL DAM
PLAN, SECTIONS AND
DETAILS

SCALE	SHT. No. 1 OF 1
AS SHOWN	
CONSULTANT Dwg No. KBL RWP PCD 222	PROJECT No. .
CLIENT DRAWING No. .	REV 0

DRAWING SIZE : A1

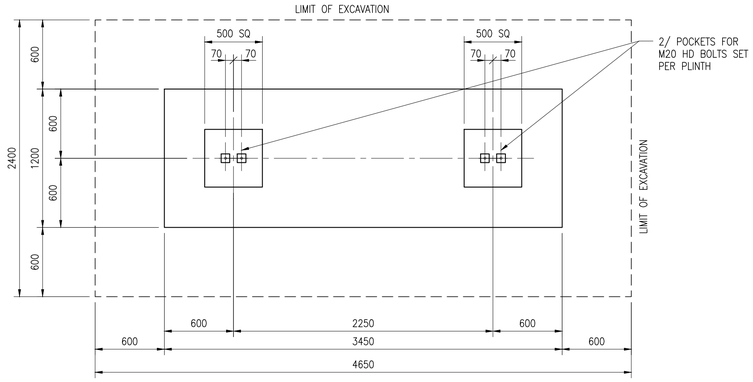

PLAN VIEW OF FOUNDATION TYPE 1

SCALE 1:25

1No. OFF REQD.

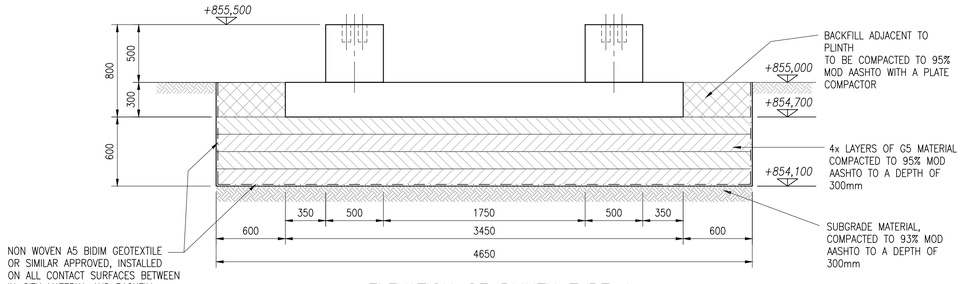

ELEVATION OF PLINTH TYPE 1

SCALE 1:25

1No. OFF REQD.

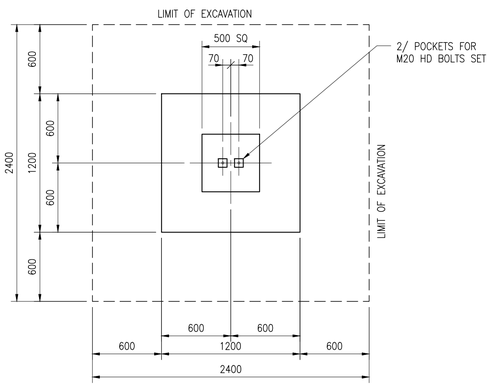

PLAN VIEW OF FOUNDATION TYPE 2

SCALE 1:25

1No. OFF REQD.

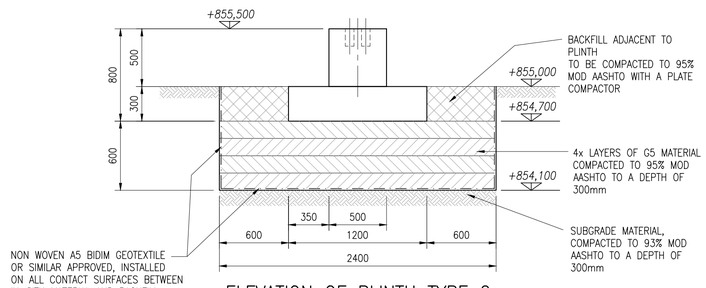

ELEVATION OF PLINTH TYPE 2

SCALE 1:25

1No. OFF REQD.

CONCRETE NOTES:

1 ALL DIMENSIONS ARE IN MILLIMETERS U.O.N.
2 THE CONTRACTOR IS TO VERIFY ALL LEVELS AND DIMENSIONS ON SITE PRIOR TO COMMENCING THE WORKS.
3 THE CONTRACTOR IS TO CLEAN THE BASE OF ALL STRUCTURES AND NOTIFY THE CIVIL ENGINEER A MIN. OF 72Hrs. PRIOR TO THE ACTIVITY TAKING PLACE.
4 CONCRETE WORKS TO BE CARRIED OUT TO SABS1200 G TO DEGREE OF ACCURACY I.
5 CONCRETE CLASSES SHALL BE AS FOLLOWS:
- STRUCTURAL: 30MPa/19mm
- BLINDING, BENCHING AND MASS: 20MPa/19mm
6 CEMENT FOR CONCRETE OF WATER RETAINING STRUCTURE TO BE 70% OPC & 30% FA
7 EXPOSED CONCRETE SHALL HAVE A 20x20mm CHAMFER.
8 ALL EXPOSED CONCRETE SURFACES SHALL HAVE A SMOOTH FINISH, i.e STEEL SHUTTER AND WOOD FLOAT FINISHES.
9 MIN. COVER TO REINFORCEMENT SHALL BE 50mm
10 FORMWORK TIE BOLTS FOR WATER RETAINING STRUCTURES TO BE SUPPLIED WITH FLANGES AND END CONES FOR BOLT CUTTING & PLUGGING. TIE BOLTS TO BE APPROVED BY THE ENGINEER
11 CONSTRUCTION JOINTS OF WATER RETAINING STRUCTURES TO BE TREATED AS SPECIFIED
12 ALL GROUT SHALL BE CEMENTITIOUS NON-SHRINKING GROUT "CONBEXTRA GP" OR SIMILAR APPROVED

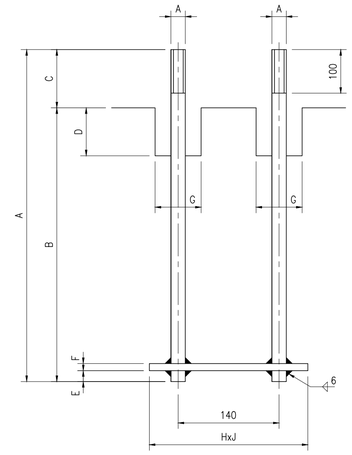

HD-BOLTS SET

TYPE	No OFF	A	B	C	D	E	F	G	H	J
M20	2X8	450	330	120	150	15	12	75X75	210	70

HD-BOLT SCHEDULE

NOTES:
1. ALL H.D. BOLTS TO BE GRADE 8.8 AND TO BE SUPPLIED WITH ONE NUT AND WASHERS EACH
2. CONTRACTOR TO TAPE AND GREASE TOP OF BOLTS
3. POCKET TO BE FORMED WITH POLYSTYRENE OR OTHER APPROVED MATERIAL
4. H.D.BOLTS SHALL BE FABRICATED FROM ROUND BAR THAT COMPLIES WITH THE REQUIREMENTS OF SANS 50025-1 AND THOSE OF SANS 50025-2

DRG. No.	REFERENCE DRAWINGS
KBL RWP 222	POLLUTION CONTROL DAM - PLAN, SECTIONS AND DETAILS
KBL RWP 223	POLLUTION CONTROL DAM - SECTIONS AND DETAILS

ISSUED FOR CONSTRUCTION

REV	DESCRIPTION	DATE	CHKD	APPR'D
0	ISSUED FOR CONSTRUCTION	August'26	BBF	

DESIGNED	BBF	Feb. 26
DRAWN	BG	Feb. 26
CHECKED	BBF	Feb. 26
PROJ. ENGINEER		
PROJ. MANAGER		

CONSULTANT:

LMJ

CLIENT:

KIBALI GOLD MINE

PROJECT/DRAWING TITLE

PAMAO PIT FTSF
TAILING AND RW PIPELINES
CIVIL WORKS

POLLUTION CONTROL DAM
PLINTHS AND HD BOLTS

SCALE: AS SHOWN	SHT. No. 1 OF 1
CONSULTANT Dwg No. KBL RWP PCD 224	PROJECT No. .

CLIENT DRAWING No. .

REV 0

DRAWING SIZE : A1

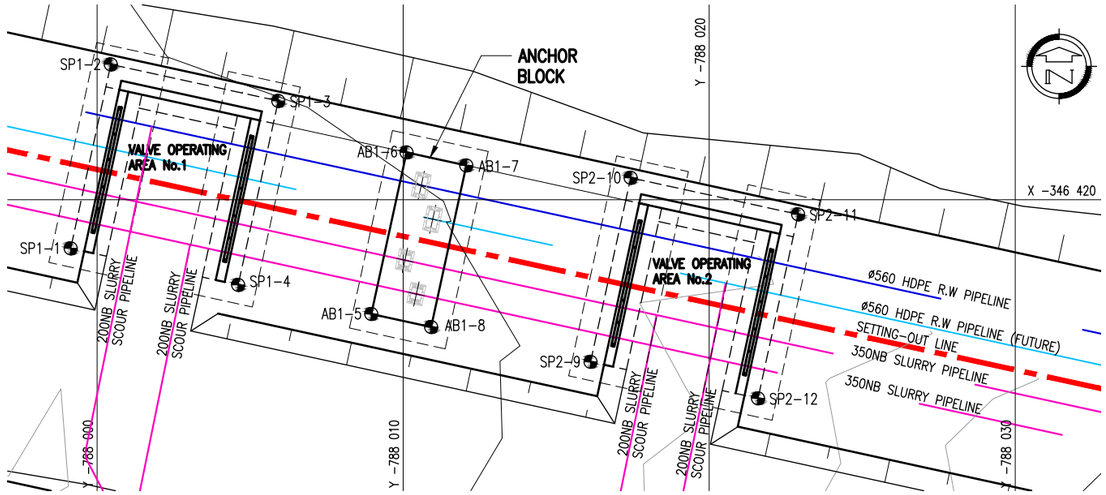

GENERAL ARRANGEMENT OF ANCHOR BLOCK AND SPILLAGE BUNDS AT THE POLLUTION CONTROL DAM

SCALE 1:100

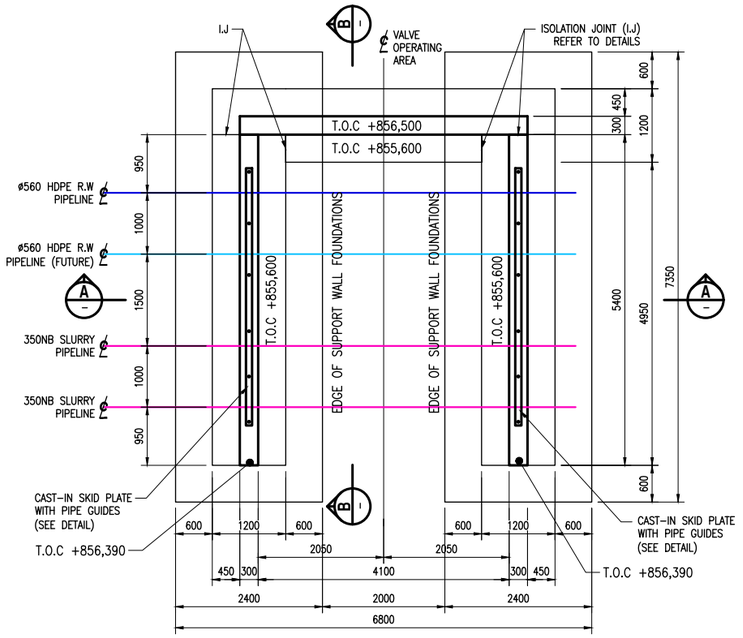

PLAN VIEW ON VALVE OPERATING AREA No.1 AND 2

SCALE 1:50

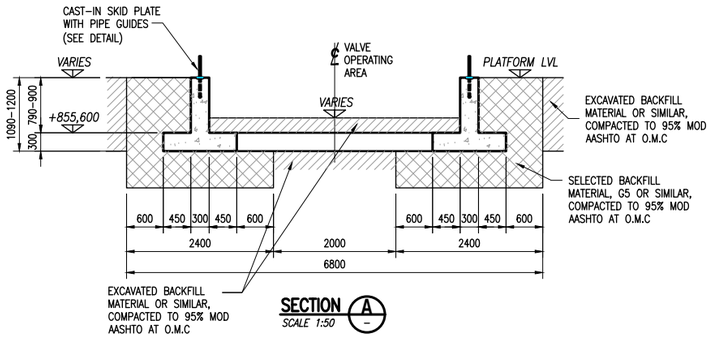

SECTION A

SCALE 1:50

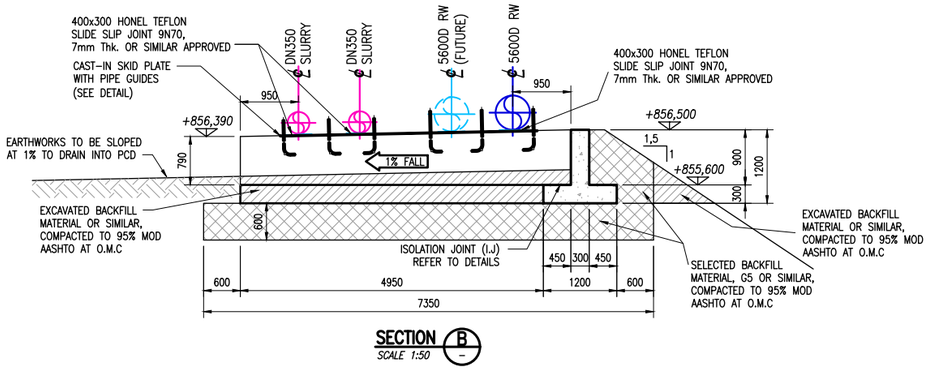

SECTION B

SCALE 1:50

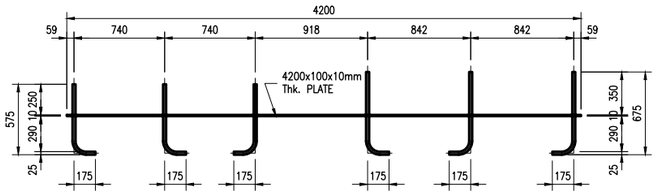

SKID PLATE DETAIL

SCALE 1:25
(4 N° OFF)

DRG. No.	REFERENCE DRAWINGS
KBL RWP 226	POLLUTION CONTROL DAM – ANCHOR BLOCK, VALVE OPERATING AREA – PLAN

COORDINATE LIST
UTM 35

SETTING-OUT DATA

POINT	X-COORD	Y-COORD
CONST:		
SP1-1	787999.137	346418.412
SP1-2	788000.447	346424.421
SP1-3	788005.919	346423.227
SP1-4	788004.608	346417.219
AB1-5	788008.959	346416.270
AB1-6	788010.110	346421.546
AB1-7	788012.064	346421.120
AB1-8	788010.913	346415.843
SP2-9	788016.124	346414.707
SP2-10	788017.434	346420.716
SP2-11	788022.906	346419.523
SP2-12	788021.596	346413.514

ISSUED FOR CONSTRUCTION

REV	DESCRIPTION	DATE	CHKD	APPRV
0	ISSUED FOR CONSTRUCTION	August'26	BBF	

DESIGNED	BBF	Jun. 26
DRAWN	BG	Jun. 26
CHECKED	BBF	Jun. 26
PROJ. ENGINEER		
PROJ. MANAGER		

CONSULTANT:

LMJ

CLIENT:

KIBALI GOLD MINE

PROJECT/DRAWING TITLE

PAMAO PIT FTSF
TAILING AND RW PIPELINES
CIVIL WORKS

POLLUTION CONTROL DAM
ANCHOR BLOCK, VALVE OPERATING AREA
GA, PLANS AND SECTIONS

SCALE	SHT. No. 1 OF 2
AS SHOWN	
CONSULTANT Dwg No.	PROJECT No.
KBL RWP PCD 225	.

CLIENT DRAWING No.: .

REV: 0

DRAWING SIZE : A1

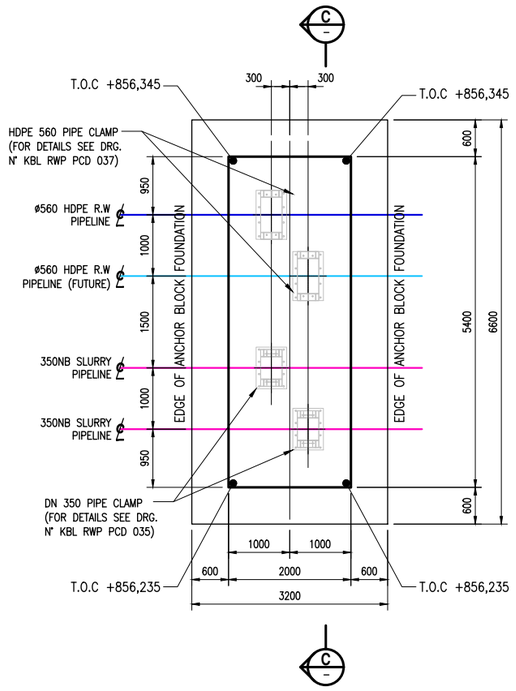

PLAN VIEW ON ANCHOR BLOCK
SCALE 1:50

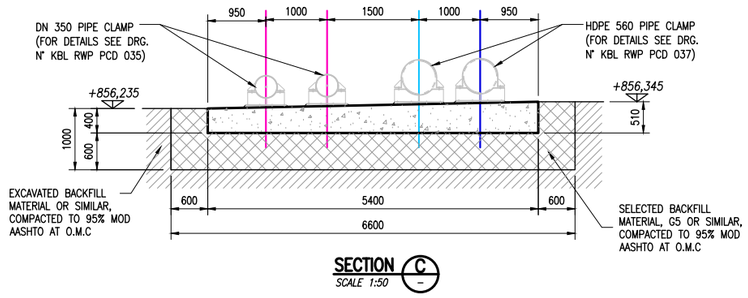

SECTION C–C
SCALE 1:50

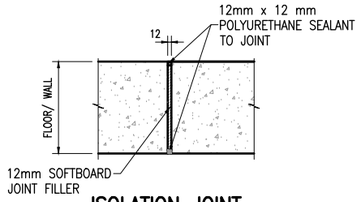

ISOLATION JOINT
SCALE 1:10

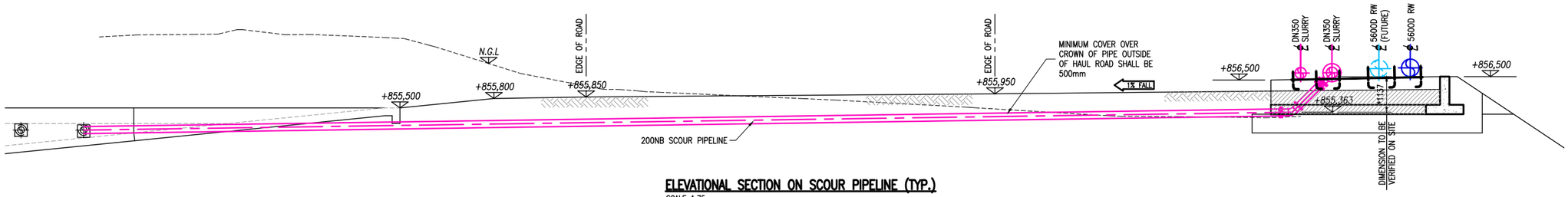

ELEVATIONAL SECTION ON SCOUR PIPELINE (TYP.)
SCALE 1:75

EARTHWORKS NOTES:

1 EARTHWORKS TO BE CARRIED OUT TO SABS1200D, DEGREE OF ACCURACY I
2 THE ENTIRE WORKS AREA SHALL BE CLEARED AND GRUBBED.
3 THE ENTIRE WORKS AREA SHALL BE STRIPPED OF 200mm TOPSOIL OR AS INDICATED & STOCKPILED.
4 ALL EARTHWORKS SHALL BE COMPACTED AS SPECIFIED ON DRAWINGS OR IN THE PROJECT SPECIFICATION.
5 THE CONTRACTOR SHALL CLEAN THE BASE OF THE EXCAVATION TO EXPOSE IN–SITU UNDISTURBED MATERIAL. IF THE CONTRACTOR'S CHOSEN PLANT CANNOT CLEAN THE BASE MECHANICALLY, HAND METHODS ARE TO BE EMPLOYED.
6 THE FLANKS OF ALL COMPLETED EARTHWORKS SHALL BE TRIMMED BACK TO EXPOSE MATERIAL COMPLYING WITH THE COMPACTION SPECIFICATIONS.
7 IN THE EVENT THAT A TOPSOIL FINISHING LAYER IS NOT SPECIFIED THE EARTHWORKS THUS EXPOSED SHALL BE TRIMMED TO LINE AND LEVEL TO PRODUCE A WORKMANLIKE FINISH UNLESS SPECIFIED OTHERWISE.
8 THE EARTHWORKS DESIGN HAS BEEN BASED ON CONTOUR INFORMATION SHOWN ON THESE DRAWINGS. THE CONTRACTOR IS TO CHECK THAT THE CONTOURS ARE A FAIR REFLECTION OF GROUND LEVELS IN THE VICINITY OF THE EARTHWORKS AND TO ADVISE THE ENGINEER ACCORDINGLY IF THIS IS NOT SO.
9 THE APPROVAL OF THE ENGINEER SHOULD BE SOUGHT IN EACH OF THE FOLLOWING SITUATIONS:
  a) INSPECTION OF CLEANED AREAS PRIOR TO COMMENCING WITH CONCRETE WORK CONSTRUCTION.
  b) INSPECTION OF FOUNDATION PRIOR TO CASTING OF BLINDING LAYER.
10 THE CONTRACTOR SHALL NOT EXCAVATE BEYOND THE LIMITS OF THESE DRAWINGS. IN THE EVENT THAT EXCAVATION IS HALTED PENDING AN INSPECTION BY ENGINEER, THE CONTRACTOR SHALL PROVIDE AT LEAST 48 HOURS TO OBTAIN THAT APPROVAL.
11 SETTING OUT OF EARTHWORKS SHALL BE BASED ON THE CO–ORDINATES GIVEN ON SITE. SHOULD THE ACTUAL POSITION DEVIATE SIGNIFICANTLY FROM THAT SHOWN, THE CONTRACTOR SHALL ADVISE THE ENGINEER ACCORDINGLY.

PIPE EARTHWORK NOTES:

1 EARTHWORK (PIPE BERM) AND BEDDING FOR PIPELINE TO BE CARRIED OUT TO SABS 1200 DB & LB RESPECTIVELY.
2 THE CONTRACTOR TO ENSURE THAT THE GROUND LEVELS INDICATED ON DRAWINGS ARE A TRUE REFLECTION OF ACTUAL SITE CONDITIONS, SHOULD THERE BE ANY SIGNIFICANT VARIANCE THE ENGINEER IS TO BE INFORMED IMMEDIATELY.
3 PIPE BEDDING AND BLANKET MATERIAL TO HAVE A P.I.<6 AND MAXIMUM PARTICLE SIZE OF 4mm COMPACTED AS SPECIFIED. BACKFILLING TO BE CARRIED OUT ON BOTH SIDES OF THE PIPES SIMULTANEOUSLY.
4 THE CONTRACTOR IS TO STOCKPILE OR DISPOSE EXCESS MATERIAL AS INSTRUCTED BY THE ENGINEER.

CONCRETE NOTES:

1 ALL DIMENSIONS ARE IN MILLIMETERS U.O.N.
2 THE CONTRACTOR IS TO VERIFY ALL LEVELS AND DIMENSIONS ON SITE PRIOR TO COMMENCING THE WORKS.
3 THE CONTRACTOR IS TO CLEAN THE BASE OF ALL STRUCTURES AND NOTIFY THE CIVIL ENGINEER A MIN. OF 72Hrs. PRIOR TO THE ACTIVITY TAKING PLACE.
4 CONCRETE WORKS TO BE CARRIED OUT TO SABS1200 G TO DEGREE OF ACCURACY I.
5 CONCRETE GRADES SHALL BE AS FOLLOWS:
  – STRUCTURES: 30MPa/19mm
  – BLINDING, BENCHING AND MASS: 20MPa/19mm
6 EXPOSED CONCRETE SHALL HAVE A 20x20mm CHAMFER.
7 ALL EXPOSED CONCRETE SURFACES SHALL HAVE A SMOOTH FINISH, i.e STEEL SHUTTER AND WOOD FLOAT FINISHES.
8 MIN. COVER TO REINFORCEMENT SHALL BE 40mm

DRG. No.	REFERENCE DRAWINGS
KBL RWP 225	POLLUTION CONTROL DAM – ANCHOR BLOCK, VALVE OPERATING AREA – GA

ISSUED FOR CONSTRUCTION

REV	DESCRIPTION	DATE	CHKD	APPRV
0	ISSUED FOR CONSTRUCTION	August'26	BBF	

DESIGNED	BBF	Jun. 26
DRAWN	BG	Jun. 26
CHECKED	BBF	Jun. 26
PROJ. ENGINEER		
PROJ. MANAGER		

CONSULTANT:
LMJ

CLIENT:
KIBALI GOLD MINE

PROJECT/DRAWING TITLE

PAMAO PIT FTSF
TAILING AND RW PIPELINES
CIVIL WORKS

POLLUTION CONTROL DAM ANCHOR BLOCK, VALVE OPERATING AREA PLAN, SECTIONS & DETAILS

SCALE	SHT. No.
AS SHOWN	1 OF 2
CONSULTANT Dwg No.	PROJECT No.
KBL RWP PCD 226	.

CLIENT DRAWING No. .
REV 0

DRAWING SIZE : A1

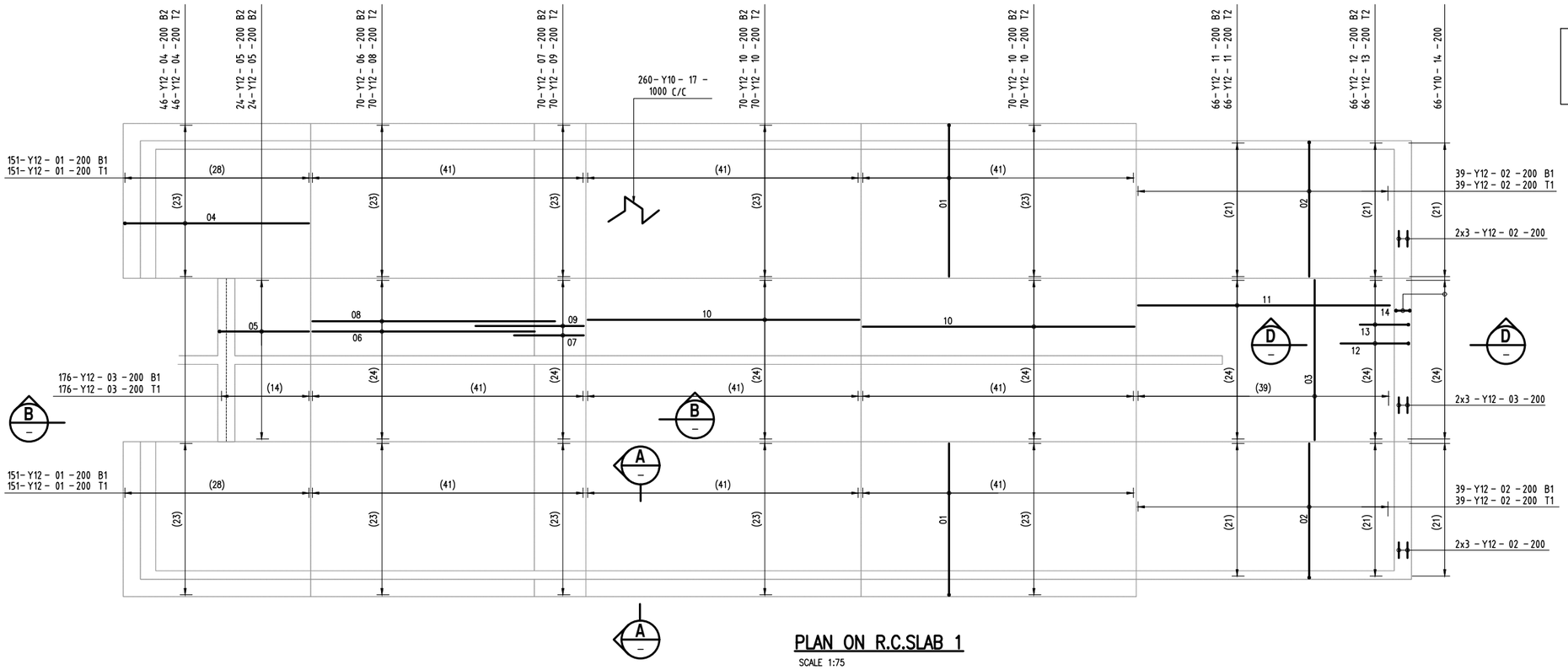

PLAN ON R.C.SLAB 1

SCALE 1:75

NOTE:
FOR R.C.SLABS 1 & 2
STARTER BARS SEE
WALLS REINFORCEMENT

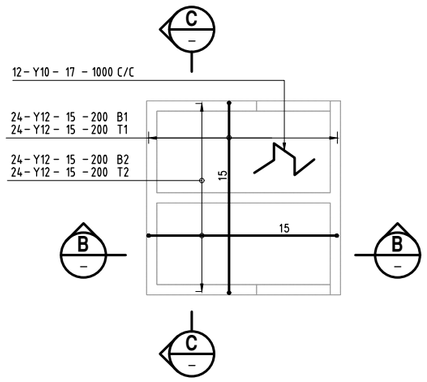

PLAN ON R.C.SLAB 2

SCALE 1:75

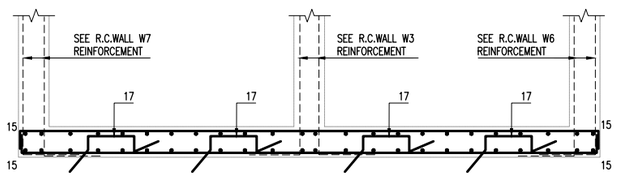

SECTION C

SCALE 1:25

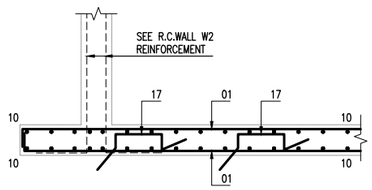

SECTION A

SCALE 1:25

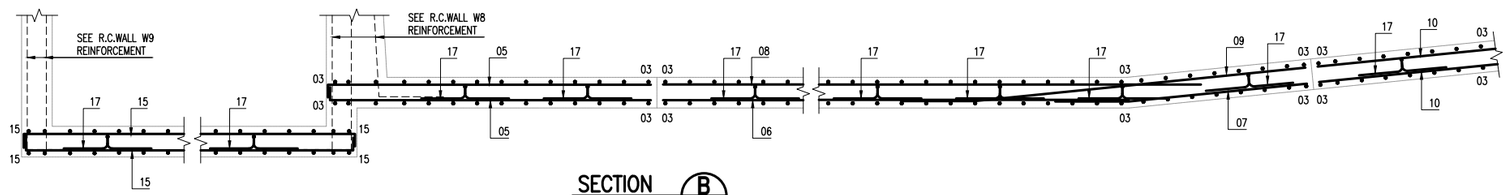

SECTION B

SCALE 1:25

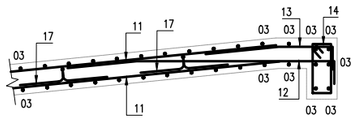

SECTION D

SCALE 1:25

DRG. No.	REFERENCE DRAWINGS
KBL RWP PSD 222	POLLUTION CONTROL DAM – PLAN, SECTIONS AND DETAILS
KBL RWP PSD 223	POLLUTION CONTROL DAM – SECTIONS AND DETAILS
KBL RWP PSD 224	POLLUTION CONTROL DAM – PLINTHS AND H.D.BOLTS
KBL RWP PSD 225	POLLUTION CONTROL DAM – ANCHOR BLOCKS
KBL RWP PSD 226	POLLUTION CONTROL DAM – ANCHOR BLOCKS
KBL RWP PSD 227	POLLUTION CONTROL DAM – REINFORCEMENT DETAILS – SHEET 2–4
KBL RWP PSD 227	POLLUTION CONTROL DAM – REINFORCEMENT DETAILS – SHEET 3–4
KBL RWP PSD 227	POLLUTION CONTROL DAM – REINFORCEMENT DETAILS – SHEET 4–4

REINFORCEMENT NOTES

1. CONCRETE COVER TO REINFORCEMENT 50mm (U.O.N)
2. ABBREVATIONS:
   - ALT – ALTERNATE
   - ABR – ALTERNATE BARS REVERSED
   - B1 – LOWEST LAYER OF BOTTOM REINFORCEMENT
   - B2 – SECOND LOWEST LAYER BOTTOM REINFORCEMENT
   - T1 – HIGHEST LAYER OF TOP REINFORCEMENT
   - T2 – SECOND HIGHEST LAYER OF TOP REINFORCEMENT
   - NF – NEAR FACE
   - FF – FAR FACE
   - EF – EACH FACE
   - EW – EACH WAY
   - STAG – STAGGERED
   - TOG – TOGETHER
   - C/C – CENTER TO CENTER
3. LAPS TO BE A MINIMUM OF 50 x BAR DIAMETER.

ISSUED FOR CONSTRUCTION

REV	DESCRIPTION	DATE	CHKD	APPRV
0	ISSUED FOR CONSTRUCTION	August'26	BBF	

DESIGNED	BBF	July' 26
DRAWN	AFH	July' 26
CHECKED	BBF	July' 26
PROJ. ENGINEER		DATE
PROJ. MANAGER		DATE

CONSULTANT:

LMJ

CLIENT:

KIBALI GOLD MINE

PROJECT/DRAWING TITLE

PAMAO PIT FTSF
TAILING AND RW PIPELINES
CIVIL WORKS

POLLUTION CONTROL DAM
REINFORCEMENT DETAILS
SHEET 1–4

SCALE: AS SHOWN	SHT. No. 1 OF 4
CONSULTANT Dwg No.: KBL RWP PCD 227	PROJECT No.: .
CLIENT DRAWING No.: .	REV: 0

DRAWING SIZE : A1