METALKOL SOCIETE ANONYME

N* 473, Boulevard Lumumba, Quartier Industrial, Commune Manika
Ville de Kolwezi
Haut Katanga Province, Democratic Republic of Congo

Date : 10/11/2026

RTR-CS000000707 : Appel d'offres.

Chers prestataires de services potentiels, nous sollicitons par la présente votre intérêt pour soumettre une candidature concernant le service : « FOURNITURE, INSTALLATION ET MISE EN SERVICE DE VANNES A GUILLOTINE DE GOULOTTE ACTIONNEES POUR LES CUVES DE LIXIVIATION DU CUIVRE (CU) ET DU COBALT (CO) »

Si vous souhaitez candidater, veuillez :

1. Confirmer votre intérêt en envoyant un courriel à rtr_tenders@ergafrica.com , en indiquant la raison sociale de votre entreprise et en précisant dans l'objet **« Fourniture, Installation et Mise en Service de Vannes à Guillotine de Goulotte Actionnées pour les Cuves de Lixiviation du Cuivre (Cu) et du Cobalt (Co)**

2. Décrire votre expérience dans les services concernés : depuis quand proposez-vous ces services et nombre de contrats que vous avez menés à bien.

3. Soumissionner l'offre technique qui comprend :
    a. La Méthodologie
    b. Les Curriculum Vitae (CVs) de la main d'œuvre qualifie pour ce service
    c. 3 preuves de travaux similaires effectuent pour d'autres partenaires
    d. Lettre provenant du fabricant (OEM)
    e. L'offre économique (Quotation) en rapport avec le cahier de charge (SOW) en attache

4. Le dossier complet doit être soumis dans un délai de **7 Jours soit du 10 au 19 Novembre 2026**

5. La visite d'inspection du site de Metalkol est prévue les **12 ou 13 novembre 2026 à 09h00**. La participation devra être confirmée au moins 24 heures à l'avance par retour de courriel à l'équipe Sécurité de Metalkol

6. La session de questions et reponses en rapport avec l appel d offre sera ouverte a **partir 13 Jusqu' au 16 Novembre 2026**

7. Dès réception de votre confirmation d'intérêt, et votre offre nous procéderons à un contrôle de conformité préalable de votre entreprise.

Si les étapes de contrôle, de pré-évaluation et celle d'évaluations sont concluantes, nous vous aviserons l'étape suivante

Cordialement,

ANNEXURE D

ACKNOWLEDGEMENT OF INVITATION TO TENDER

PLEASE NOTE:

This acknowledgement MUST be completed by or before:
11 November 2026.

ENQUIRY NO: **RTR-CS000000707**
ENQUIRY: **Supply and Installation of Cu and Cu Leach launder gate valves**

TO: **ERG Africa** Telephone **: +243 81 31 23 480**

ATT: **Lisette Samba** Email **:** Lisette.Samba@ergafrica.com

FROM: _____

Acknowledge receipt of the above enquiry and confirm that we:

☐ Will be submitting a tender

☐ Will not be submitting a tender for the following reasons:

Our reason for not submitting a tender is:

.....

.....

SIGNED: _____

DATE: _____

DESIGNATION: _____

COMPANY: _____

SCOPE OF SERVICES

Engineering / Process operations

Supply and installation of Cu and Co leach tanks actuated launder gate valves

	DESCRIPTION
Site:	Metalkol SA
Location:	RTR – Metalkol Site
Contract Owner:	

CHECKLIST	**YES**	**NO**
Dealings with Government Authorities		**No**
Advance Payment(s)		**No**
Contractors	**Yes**	

SCOPE OF WORK REVISION INDEX:

ISSUE CODE	**REVISION**					**REVISION DETAILS**
	NO.	**BY**	**REV'D.**	**APP.**	**DATE**	
FA	1	AZ			06/05/2026	FIRST DRAFT

ISSUE CODES KEY

FI	For Information
FA	For Approval
DG	For Internal Review
CA	For Client Approval
UF	For Your Use/Files

CONTENTS

YES 1
1. SCOPE OVERVIEW 4
2. RISKS 10
3. IMPACT 13
4. REFERENCES 13
5. ADDITIONAL INFORMATION FOR PROCUREMENT 13
Key Performance Indicators 14

1. SCOPE OVERVIEW

1. INTRODUCTION

The Contractor is invited to the Tender process for:

1.1. Purpose of the Service

i. To improve the operational reliability, isolation efficiency, and process control of the copper leach tank launders in AREA 120 – LEACHING by supplying, installing, testing, and commissioning pneumatically actuated launder gate valves on tanks 12-TK-101, 12-TK-102, 12-TK-103, 12-TK-104, and 12-TK-200.

The new actuated gate valves are intended to provide reliable slurry isolation and controlled flow diversion between leach tanks while improving sealing performance, reducing slurry leakage, minimizing manual intervention, and increasing resistance to abrasive and corrosive process conditions associated with copper leaching operations.

The upgrade will also improve operational flexibility, maintenance safety, and integration with the plant automation/control system through pneumatic actuation and position feedback instrumentation.

ii. The services include:

The service shall include, but not be limited to, the following:

- Supply of complete 900 mm x 1200 mm pneumatically actuated launder gate valves complete with:
  - Duplex Stainless Steel 2205 or super duplex 2507 frames and gates;
  - Polyurethane-coated stainless steel sealing arrangements;
  - Double-acting pneumatic cylinders;
  - Position indication proximity switches;
  - Stainless steel pneumatic control enclosures;
  - Solenoid valves, air filter regulators, tubing, fittings, gauges, and all associated accessories;
  - Launder pocket assemblies with wedge systems in 316 SS and HDPE.
- Spare Parts and Reliability Strategy
- Detailed site verification and confirmation of existing launder dimensions, elevations, structural supports, and installation interfaces prior to fabrication and installation.
- Removal of existing manual launder gates and associated components where applicable.
- Mechanical installation of the new launder gate valves, pneumatic actuators, wedges, support structures, brackets, and associated assemblies.
- Modification and strengthening of existing steelwork, gratings, or supports where required to accommodate the new valve assemblies, actuator loads, and gate opening clearances.
- Supply and installation of pneumatic tubing, fittings, air preparation units, and all required pneumatic connections from the plant instrument air system to the actuated valves.
- Electrical and instrumentation works including installation and termination of open/proximity switches, solenoid valve wiring, junction box connections, and integration into the plant PLC/SCADA system where applicable.
- Verification of instrument air availability, pressure stability, and air quality requirements for reliable operation of the pneumatic actuators.
- Functional testing, stroke testing, leak testing, alignment checks, and full commissioning of all installed valves under operational conditions.
- Provision of all required commissioning reports, test certificates, as-built drawings, datasheets, operation and maintenance manuals, and recommended spare parts lists.
- Training of operations and maintenance personnel on safe operation, inspection, troubleshooting, and maintenance of the actuated launder gate valves.

- Compliance with all applicable site safety requirements, plant standards, and relevant engineering specifications for corrosive and abrasive slurry service.

The Contractor is required to provide a minimum 6 (six) -month Warranty on Materials and Workmanship

1.2. Site location and access

Site location will be limited to:

The works shall be executed at Metalkol RTR within AREA 120 – LEACHING, specifically on the copper leach tanks:

- 12-TK-101
- 12-TK-102
- 12-TK-103
- 12-TK-104
- 12-TK-200

located at the copper leaching section of the process plant in Kolwezi, Lualaba Province, Democratic Republic of Congo.

2. SCOPE OF SERVICES

2.1. DETAILED DESCRIPTION OF THE SERVICES

The scope of services includes, but is not limited to, the following:

- Supply of complete pneumatically of **13 No.s** of actuated 900 mm x 1200 mm launder gate valve assemblies, including pneumatic actuators, wedges, seals, instrumentation, tubing, and control accessories. As per attached highlighted P&IDs
- Site inspection, dimensional verification, and engineering assessment prior to installation.
- Removal of existing launder gate valves and associated components where applicable.
- Mechanical installation and alignment of new gate valves, pocket assemblies, pneumatic cylinders, supports, brackets, and associated steelwork modifications.
- Supply and installation of pneumatic piping, fittings, regulators, solenoid valves, and connection to the plant instrument air system.
- Electrical and instrumentation works including installation and termination of proximity switches, solenoid valves, and integration into PLC/SCADA systems where required.
- Modification of existing gratings, supports, and structural steel were necessary to accommodate actuator loads, gate travel, and maintenance access.
- Functional testing, leak testing, stroke testing, and full commissioning of all installed valves and pneumatic systems.
- Provision of all required technical documentation including datasheets, GA drawings, as-built drawings, test reports, commissioning reports, O&M manuals, and spare parts recommendations.
- Training of Operations and Maintenance personnel on operation, inspection, troubleshooting, and maintenance of the actuated gate valves.
- Compliance with all applicable site safety requirements, plant engineering standards, and quality requirements for abrasive and corrosive slurry service.

2.2. CONTRACTOR SUPPLIED ITEMS

- Contractor shall supply all materials, equipment, consumables, tools, labour, supervision, and accessories required for the complete execution of the works, including but not limited to:
- Complete pneumatically actuated launder gate valve assembly drawings;
- **1-year critical spares package**
- OEM lead times
- Launder pocket assemblies and wedge systems;
- Pneumatic cylinders, solenoid valves, regulators, gauges, tubing, fittings, Seal kits and pneumatic control enclosures;
- Proximity switches and associated instrumentation accessories;
- Mounting brackets, supports, anchors, bolts, gaskets, and fastening hardware;
- Structural steel, supports, and grating modification materials where required;
- Pneumatic piping/tubing and connection accessories;
- Electrical cables, glands, conduits, junction accessories, and termination materials required for installation;
- Welding consumables, sealants, coatings, and installation consumables;
- Tools, testing equipment, and commissioning equipment;
- Labour, supervision, commissioning personnel, and specialist technicians;
- All transport, handling, and delivery of materials to site;
- As-built drawings, technical documentation, test certificates, and operation & maintenance manuals.

-

Note. *All equipment and ancillaries (Mobile equipment, Electrical and Hand Tools) must be inspected by Metalkol SHS Department for "Safe for Use" acceptance prior to being deployed for operational use, and the contractor must remove from Metalkol Site, any equipment deemed "Unsafe/ Unfit for Use" immediately.*

3. RESOURCES: PERSONNEL

Contractor Manning and Representation

The Contractor shall provide all competent personnel, supervision, and technical resources required for the safe execution, installation, testing, and commissioning of the works.

This shall include, but not be limited to:

- Site/Project Supervisor;
- Mechanical fitters and boilermakers;
- Certified welders;
- Pneumatic, electrical, and instrumentation technicians;
- Riggers and lifting personnel;
- QA/QC Inspector;
- HSE Officer;
- Commissioning technicians;
- General labourers as required.

The Contractor shall nominate a responsible site representative for coordination with the Owner and ensure all personnel are properly trained, medically fit, inducted, equipped with required PPE, and compliant with site safety requirements.

4. RESOURCES: EQUIPMENT

- The required number of Equipment, Tools and Consumables shall be assessed for deployment at the discretion of the Contractor to complete the Project on time

- The tools and equipment list is not exhaustive nor binding, and the Contractor shall include in its tender proposal a detailed list of Equipment, Tools, Consumables it deems necessary to complete the Project on time.

5. WORK MANAGEMENT

The Contractor shall plan, supervise, coordinate, and execute all works safely and in accordance with approved procedures, specifications, quality standards, and site requirements.

The Contractor shall:

- Coordinate all activities with the Owner's representative;
- Submit required method statements, risk assessments, and work procedures;
- Comply with permit-to-work and isolation procedures;
- Ensure proper supervision, quality control, and housekeeping on site;
- Execute installation, testing, and commissioning activities according to approved standards;
- Report progress, technical issues, and safety matters during execution;
- Submit all required inspection reports, test records, and as-built documentation upon completion.

6. TRAINING

6.1. Metalkol shall provide the following specific training to the Contractor's personnel:

6.1.1. The training that is required for each role for entry to the Company's Site includes the following:

TABLE 1 – COMPANY TRAINING REQUIREMENTS:

Contractor Role / *Company Training*	*Company Specific*	*Contract / Shut Coordinator*	*HSE Adviser*	*Supervisors*	*Trades*	*Riggers/ Advanced Riggers*	*Trade Assistants*
Site Inductions	✓	*M*	*M*	*M*	*M*	*M*	*M*
Proof of Drug & Alcohol Test Compliance	✓	*M*	*M*	*M*	*M*	*M*	*M*
Communicate information	✓	*M*	*M*	*M*			
Fatigue Management Training	✓	*M*	*M*	*M*	*M*	*M*	*M*
Fatigue Management for Supervisors Training	✓			*M*			
JHA & Risk Identification Training	✓			*M*	*M*	*M*	*M*
Manual Handling Training	✓			*M*	*M*	*M*	*M*

Legend:
M = Mandatory
R = Mandatory for those personnel required to undertake tasks in the area
N = Nominated Responsible People

6.1.2. The Company shall provide specific training, as listed in Table 1 above, for the Contractor's personnel at the commencement of the provision of the Services, in accordance with the Agreement's Pricing Schedule.

6.1.3. Ongoing training costs will be limited as per the Pricing Schedule.

6.1.4. The Company's specific training may be amended and updated from time to time as part of the Company's changes to policies and procedures and the Contractor is expected to abide by those changes as and when they occur.

6.1.5. The Company has detailed work procedures and training procedures that may apply to some or all aspects of the Services. The Contractor is required to train its personnel in all training procedures and detailed work procedures. Further, the Contractor may reasonably recommend changes to the training and work procedures, as required.

6.1.6. The amount and ratios of the training required for the Contractor's personnel will be determined in conjunction with the Company Representative on a case-by-case basis and based on Company requirements.

6.1.7. The Contractor is required to notify the Company in writing prior to any scheduled training that Contractor Personnel are unable to attend.

7. SUMMARY OF DELIVERABLES

- The Contractor is required to deliver a completed, to Specification, to Standards Project within the Scheduled Timeline as defined in the Agreed to Schedule, provided with the Tender Documents

8. OPERATIONAL REQUIREMENTS

- Mobilisation: The Contractor is responsible for mobilisation, and mobilisation costs are included.
- Demobilisation: The Contractor is responsible for demobilisation, and demobilisation costs are included.

9. MILESTONES AND TIMELINES / PROJECT SCHEDULE

- The Contractor shall submit a detailed project schedule covering engineering verification, procurement, manufacturing, delivery, installation, testing, commissioning, and final handover activities. Regular progress updates shall be provided throughout the project execution period. The estimated delivery lead time for the pneumatically actuated launder gate valves is approximately 26–28 weeks from purchase order approval.

10. SPECIFICATIONS AND DRAWINGS OF THE PROJECT

- See attached drawing of the copper leach circuit highlighting locations (Metalkol supplied Drawing)

10.1. REPORTING REQUIREMENTS AND THE REPORTING FREQUENCY:

10.1.1. All Daily Progress Reports and Daily Timesheets shall be signed on behalf of the Contractor by the Contractor's Representative, or such other authorised representative of the Contractor, and signed and approved on behalf of the Company by the Company's Field Representative and the Company's Representative.

10.1.2. All Daily Progress Reports and Daily Timesheets will include employee names as well as company numbers.

10.1.3. All Contractor personnel numbers (as recorded on the Daily Attendance Register and Toolbox Talks Sheet) shall be reported to the SHS Department Representative daily.

10.2. ADDITIONAL MEASURES REGARDING HEALTH, SAFETY AND ENVIRONMENTAL

- The contractor shall abide by the SHS rules and regulations as stipulated for the Metalkol site.

11. OTHER GENERAL REQUIREMENTS

As defined in this Scope of Work

11.1. INSURANCE POLICIES REQUIRED

All insurance/s as required by the Contractor to be able to perform work on Metalkol site.

11.2. LICENCING AND PERMITS

All employees required to operate machinery, or mobile equipment will have valid certification, licenses and permits, and must be tested and signed off by Metalkol SHS department.

11.3. QUALITY REQUIREMENTS

All quality standards will be as per Metalkol Quality Control Standards.

12. COMPANY OBLIGATIONS

The Company shall provide the Contractor with the following, to enable it to deliver the Project:

- **Goods and Services to be made available to the Contractor:**

  - Access to Metalkol SA Site
  - Working Area
  - No transportation will be provided by Metalkol SA
  - Safe Storage for all Acid Proofing materials as defined in 1.1.i..
  - Meals: 1 (one) Single meal (lunch) per person per working day will be subject to negotiation on award of the contract.

2. RISKS

Risk Name	Risk Description / Statement	Risk Causes	Risk Consequences	Exposure Period	Control Name / Description	Probability	Financial Impact	Health & Safety	Environmental	Quality	Reputational & Social	Legal & Compliance
Delayed Equipment Delivery	Delay in manufacturing or delivery of actuated gate valves and components	Long OEM lead times, logistics delays, customs clearance issues	Project delay, extended shutdown duration, increased project cost	From PO award until material delivery	Expediting follow-up, approved procurement schedule, logistics tracking, early ordering of long lead items	Medium	High	Low	Low	Medium	Medium	Low
Structural Support Failure	Existing steel structures or gratings may not support actuator and valve loads	Inadequate structural assessment or weak existing supports	Structural deformation, unsafe installation conditions, equipment damage	During installation and operation	Structural verification and reinforcement before installation	Medium	Medium	High	Low	High	Medium	Medium
Pneumatic System Failure	Pneumatic actuators may fail to operate correctly	Low instrument air pressure, moisture contamination, poor air quality	Valve malfunction, process interruption, operational instability	During commissioning and operation	Air pressure verification, installation of regulators	Medium	Medium	Medium	Low	High	Medium	Low

					and moisture control, functional testing							
Slurry Leakage Through Valve	Inadequate valve sealing under abrasive slurry conditions	Seal wear, poor alignment, improper installation	Slurry spillage, process inefficiency, housekeeping issues	During operation	OEM installation procedures, seal inspection, commissioning tests, periodic maintenance	Medium	High	Medium	Medium	High	Medium	Low
Lifting and Rigging Incident	Injury or equipment damage during handling and installation	Improper lifting methods, inadequate rigging equipment, lack of supervision	Personnel injury, dropped equipment, project delays	During installation	Approved lifting plans, certified lifting equipment, trained riggers and supervision	Medium	High	High	Low	Medium	High	High
Welding and Hot Work Hazards	Fire or injury during welding and cutting activities	Poor hot work control, inadequate PPE, uncontrolled sparks	Personnel injury, fire incident, equipment damage	During installation	Hot work permits, fire watch, PPE compliance, area isolation	Medium	Medium	High	Medium	Medium	High	High

Incorrect Valve Installation	Improper alignment or installation of gate valves and actuators	Poor workmanship, deviation from drawings, inadequate supervision	Premature failure, leakage, actuator damage	During installation and commissioning	QA/QC inspections, alignment checks, OEM compliance verification	Medium	High	Medium	Low	High	Medium	Medium
PLC / Instrumentation Integration Failure	Failure of valve signals or control integration with SCADA/PLC	Incorrect wiring, programming issues, faulty instrumentation	Loss of remote control and indication	During commissioning	I/O testing, signal verification, commissioning checks	Low	Medium	Low	Low	Medium	Medium	Medium
Corrosion and Abrasion Damage	Premature deterioration of components in acidic slurry environment	Aggressive process conditions, incorrect material selection	Reduced equipment life, increased maintenance costs	During operation	Use of 316 SS and polyurethane protection, routine inspections	Medium	Medium	Low	Medium	High	Medium	Low
Non-Compliance with Site Safety Requirements	Failure to comply with plant safety procedures and permits	Poor supervision, lack of training, unauthorized work	Work stoppage, incidents, penalties	Entire project duration	Site inductions, permit-to-work system, HSE supervision and audits	Low	Medium	High	Medium	Medium	High	High

3. IMPACT

Impact Area	Description	Quantitative Assessment of Impact
Leach tanks, CO and Cu	Continued operation without actuated launder gate valves may result in poor slurry isolation, uncontrolled flow distribution between leach tanks, increased manual intervention, slurry leakage, and reduced operational flexibility during maintenance or process control activities.	Increased downtime hours, reduced process stability, increased manual operation frequency, slurry spill occurrences, production losses, maintenance intervention frequency.

4. REFERENCES

Without limiting the Contractors obligations under the Standard Terms and Conditions the Contactor must be aware of the following reference documents and incorporate any requirements set out in these documents in delivery of the Project.

a) Scope of Work

b) Completion Schedule

c) Project Quality Control Pack

d) Daily Diaries

e) Final Handover Snag / Punch List

f) Final Handover Documentation

** This list does not limit other reference documents that maybe relevant to this Scope of Work.

5. ADDITIONAL INFORMATION FOR PROCUREMENT

The Commodity Specialist to delete this section before adding the SOW to the tender pack

1. Required documentation on or before Statement Date:

The Contractor shall provide the following supporting documentation with the final Statement:

1.1 All Invoices related to such Statement.

1.2 Complete set of copies of all Progress Reports relating to all Invoices which are listed in such Statement, which Progress Reports adheres to the provisions of Annexure A, Clause 3.1.

2. Additional terms relating to the Price:

2.1 The Price shall be:

2.1.1 inclusive of Direct Tax;

2.1.2 Exclusive of Indirect Tax;

2.1.3 Quoted in the Applicable Currency;

2.1.4 Fixed for the duration of this Agreement.

KEY PERFORMANCE INDICATORS

Project Progress Evaluation

The key performance indicators for this project shall include completion of installation activities within the approved schedule, successful testing and commissioning of all actuated launder gate valves, reliable valve open/close operation with accurate PLC/SCADA feedback signals, and effective slurry sealing without leakage under operational conditions. Additional KPIs shall include compliance with quality requirements, zero major safety incidents during execution, successful pneumatic leak and functional testing, and complete submission of all required project documentation, commissioning records, and as-built drawings.

END

STEP 1:
- INSERT HDPE MATT INTO POCKET ASSEMBLY.
- INSERT SUITABLE PLUGS INTO DRAINAGE SOCKETS.

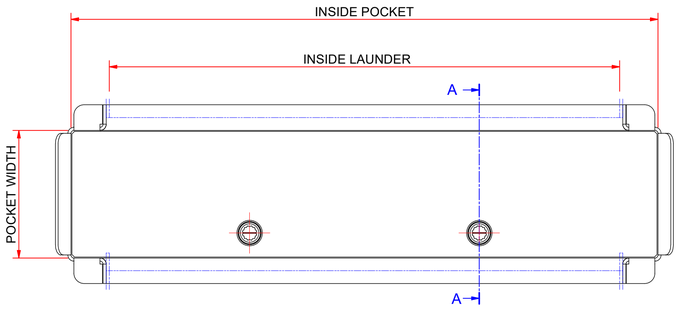

PLAN VIEW
(1 : 6)

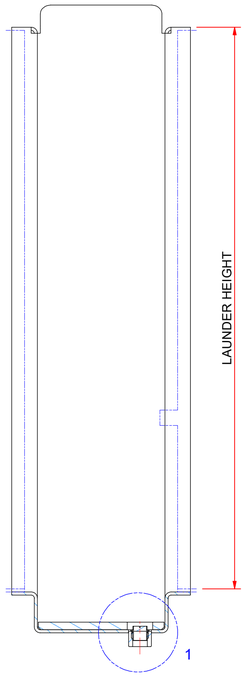

SECTION A-A
(1 : 6)

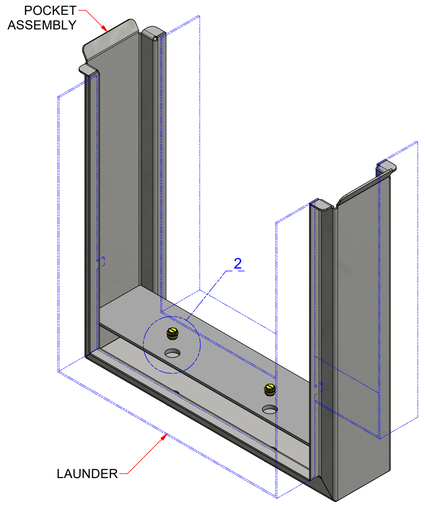

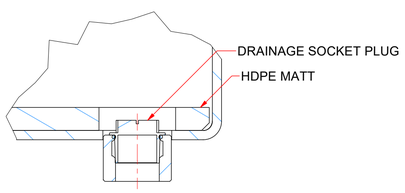

DETAIL 1
(1 : 2)

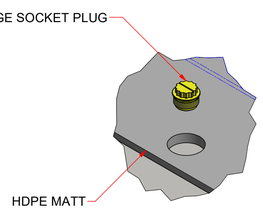

DETAIL 2
(1 : 4)

STEP 2:
- APPLY SELF-ADHESIVE SEALING GASKET TO LAUNDER GATE SEALING FACE (NON CAM SIDE).
- ASSEMBLE THE LAUNDER GATE JACKING PLATES ONTO THE LAUNDER GATE TOP FRAME USING THE FASTENERS PROVIDED.

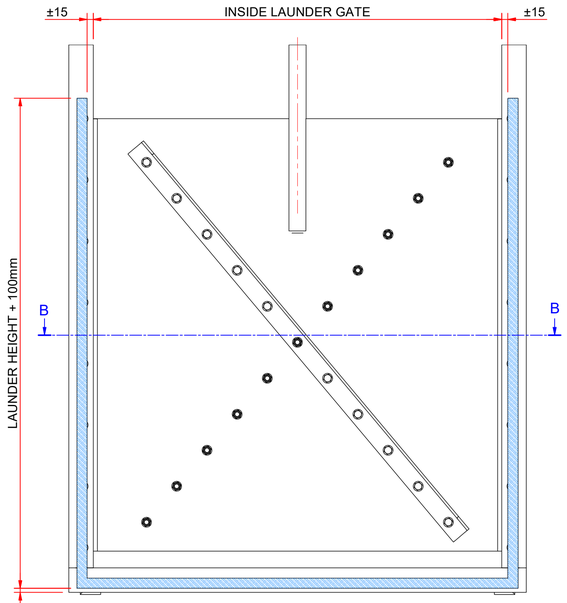

VIEW ON LAUNDER GATE SEALING FACE
(1 : 7.5)

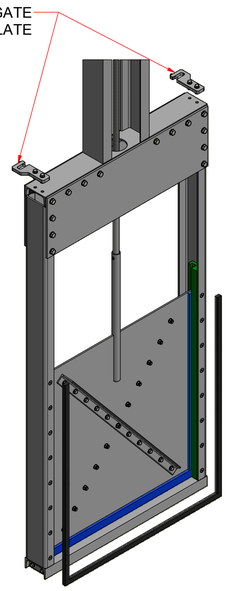

ISOMETRIC VIEW 1

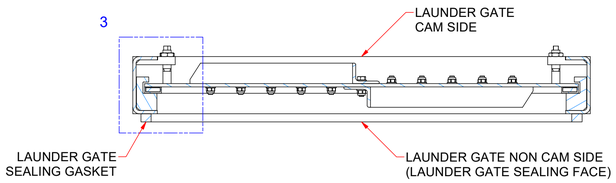

SECTION B-B
(1 : 7.5)

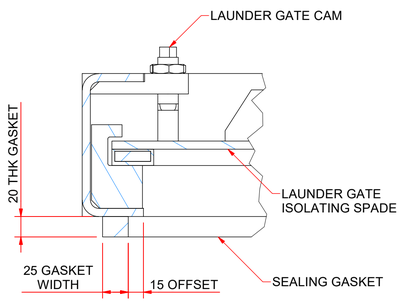

DETAIL 3
(1 : 3)

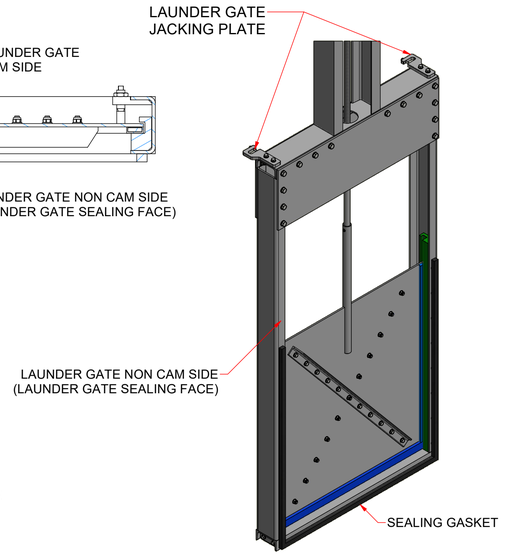

ISOMETRIC VIEW 2

STEP 3:
- USING SUITABLE LIFTING EQUIPMENT, LOWER THE LAUNDER GATE INTO THE POCKET TAKING NOTE OF THE DIRECTION OF SLURRY FLOW.
- ENSURE THAT THE APPLIED GASKET DOES NOT GET DAMAGED WHILE LOWER THE LAUNDER GATE INTO THE POCKET.
- ONCE THE LAUNDER GATE IS RESTING ON THE HDPE MATT, SHIFT THE LAUNDER GATE UNTIL THE GASKET MAKES CONTACT WITH THE POCKET SEALING FACE.

NB! KEEP THE LAUNDER GATE CONNECTED TO THE CRANE UNTIL ALL ASSEMBLY STEPS HAVE BEEN PERFORMED.

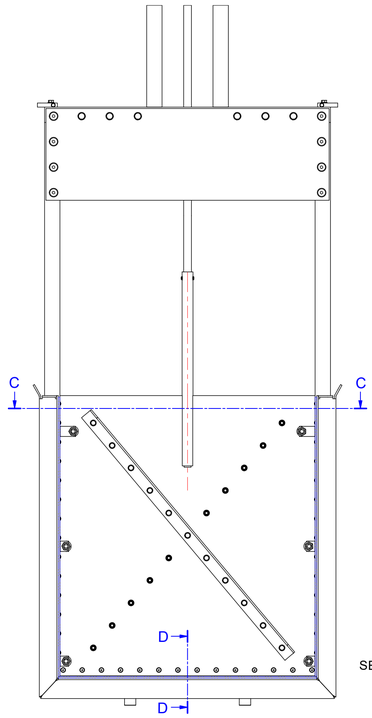

VIEW ON LAUNDER CAM SIDE
(1 : 12)

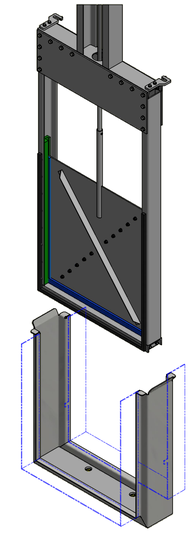

ISOMETRIC VIEW

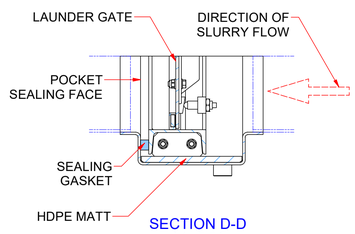

SECTION D-D
(1 : 7.5)

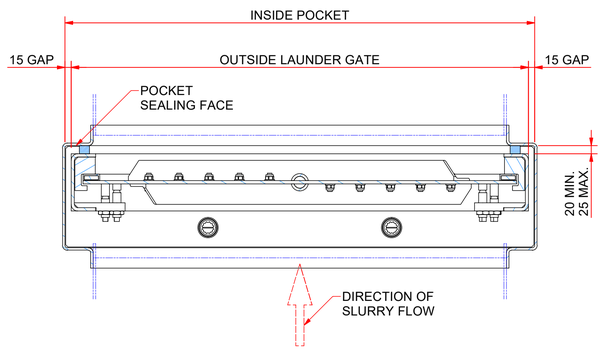

SECTION C-C
(1 : 7.5)

DRAWING NO:	REFERENCE DRAWING TITLE:	REV:	NAME:	DATE:	DESCRIPTION:

DRAWN BY: B.Harvey
DATE: 20 Jan 2022
ENGINEER:
MODEL:
SIZE 1:
SIZE 2:
SIZE 3:

CLIENT: KEMIX

PROJECT: KEMIX

THIS DRAWING IS THE PROPERTY OF KEMIX (PTY) LTD AND MAY NOT BE COPIED OR REPRODUCED EITHER WHOLLY OR IN PART WITHOUT THE WRITTEN PERMISSION OF THE AFOREMENTIONED COMPANY.

KEMIX® (PTY) LTD
47 KYALAMI BLVD, KYALAMI BUSINESS PARK
JOHANNESBURG, SOUTH AFRICA
P.O. BOX 31949, KYALAMI, 1684
TEL. (+27 11) 466 2490
FAX (+27 11) 466 2190
E-MAIL: kemix@kemix.com
WEB: www.kemix.com

TITLE: LAUNDER GATE AND POCKET ASSEMBLY

SHEET SIZE:	SCALE:	SHEET NO:	DRAWING NO:	REV:
A1		1 OF 3	-	0

STEP 4:

NB! KEEP THE LAUNDER GATE CONNECTED TO THE CRANE UNTIL ALL ASSEMBLY STEPS HAVE BEEN PERFORMED.

- INSERT THE JACKING NUT WITH ASSEMBLED THREADED ROD INTO THE JACKING PLATES VIA THE SLOTS PROVIDED. ENSURE THAT THE LAUNDER GATE JACKING WEDGES ARE ORIENTATED AS PER THE VIEWS INDICATED.
- ONCE THE JACKING WEDGES ARE ORIENTATED CORRECTLY, INSERT THE LOCKING BOLT INTO THE JACKING PLATE TO ENSURE THE JACKING NUT REMAINS IN PLACE.
- USING THE NUT, ROTATE THE THREADED ROD UNTIL THE COMPLETE ASSEMBLY IS RESTING ON THE HDPE MATT. ENSURE THAT NO EXCESSIVE FORCE IS USED AS THIS COULD RESULT IN DAMAGE TO THE THREADED ROD.

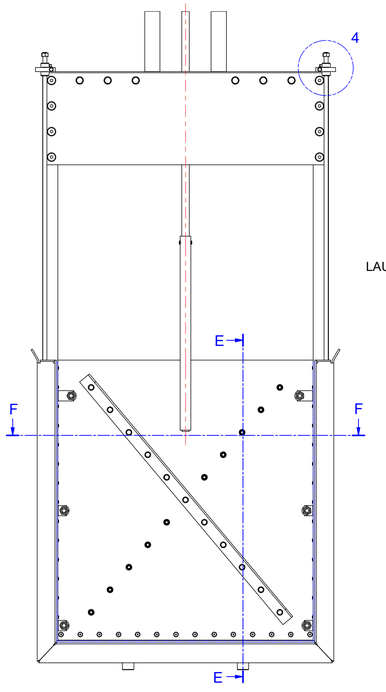

FRONT VIEW
(1 : 12)

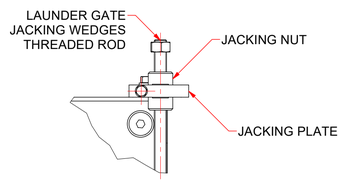

DETAIL 4
(1 : 4)

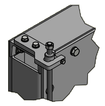

DETAIL 8

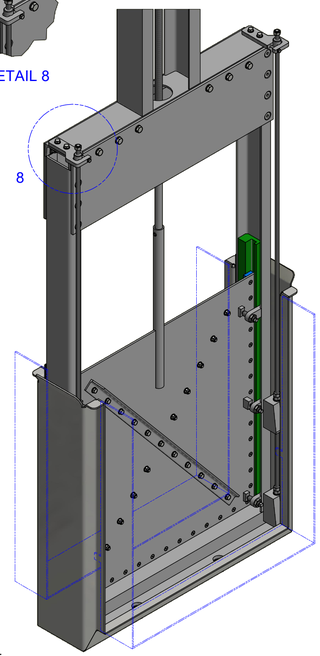

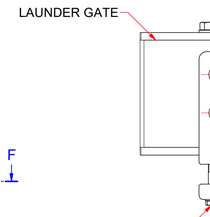

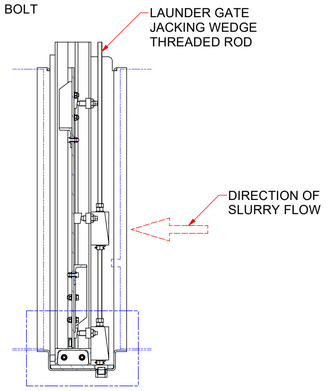

SECTION E-E
(1 : 12)

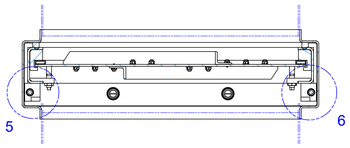

SECTION F-F
(1 : 12)

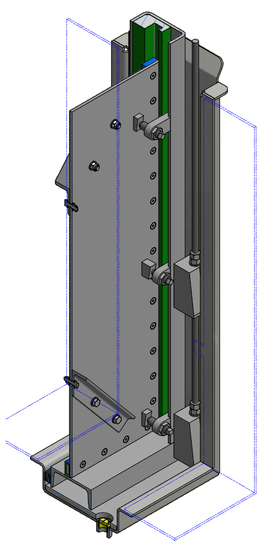

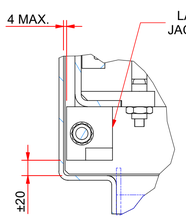

DETAIL 5
(1 : 4)

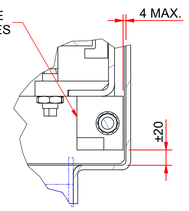

DETAIL 6
(1 : 4)

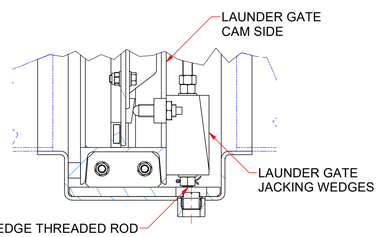

DETAIL 7
(1 : 5)

STEP 5:

NB! KEEP THE LAUNDER GATE CONNECTED TO THE CRANE UNTIL ALL ASSEMBLY STEPS HAVE BEEN PERFORMED.

- LOOSELY FIT THE POCKET WEDGE BRACKETS TO THE TANK TOP STRUCTURE VIA THE SLOTS PROVIDED.
- ORIENTATE THE POCKET JACKING WEDGES UNTIL THE ANGLES ARE SEATED FLUSH WITH THE POCKET FACE AND THE OUTER EDGE OF THE ANGLES ARE PRESSED AGAINST THE LAUNDER / POCKET LOCATING TAB.
- ONCE THE POCKET JACKING WEDGES ARE ORIENTATED CORRECTLY, TIGHTEN THE FASTENERS ON THE POCKET WEDGE BRACKETS.

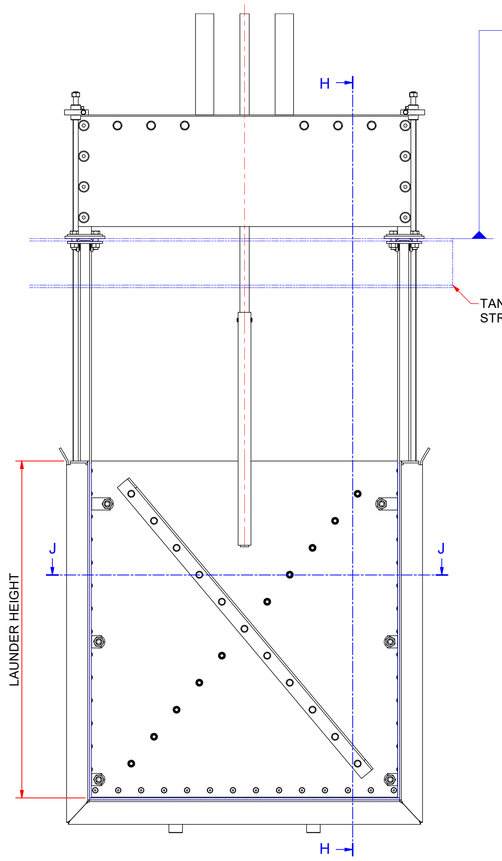

FRONT VIEW
(1 : 10)

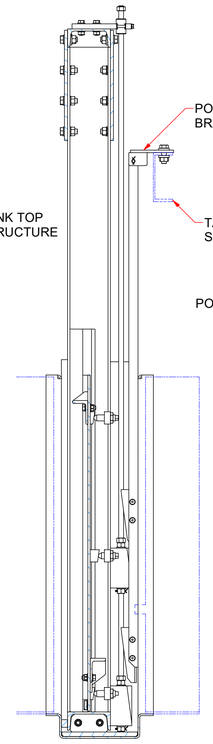

SECTION H-H
(1 : 10)

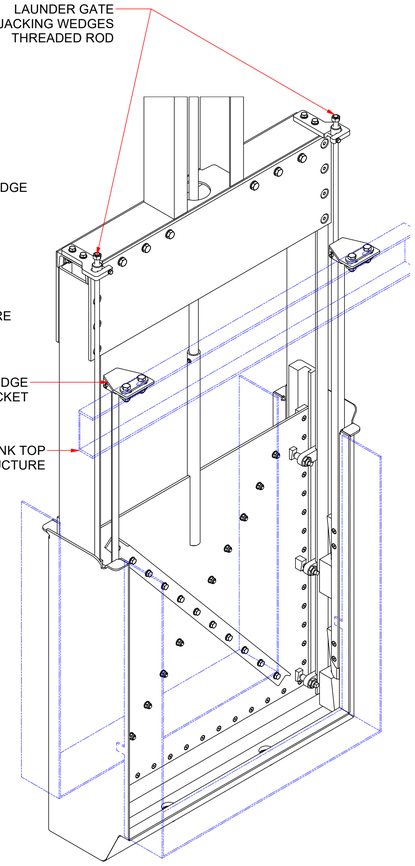

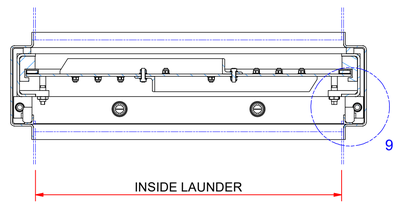

SECTION J-J
(1 : 10)

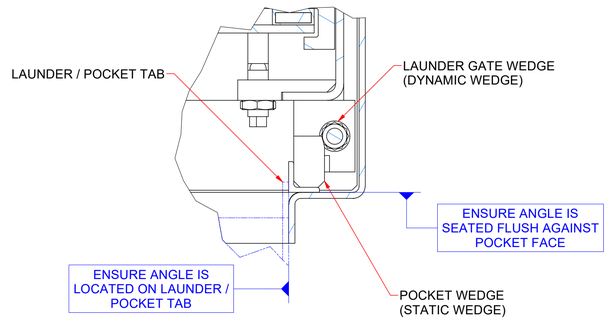

DETAIL 9
(1 : 3)

DRAWING NO:	REFERENCE DRAWING TITLE:	REV:	NAME:	DATE:	DESCRIPTION:

DRAWN BY: B.Harvey
DATE: 20 Jan 2022
ENGINEER:
MODEL:
SIZE 1:
SIZE 2:
SIZE 3:

CLIENT: KEMIX

PROJECT: KEMIX

THIS DRAWING IS THE PROPERTY OF KEMIX (PTY) LTD AND MAY NOT BE COPIED OR REPRODUCED EITHER WHOLLY OR IN PART WITHOUT THE WRITTEN PERMISSION OF THE AFOREMENTIONED COMPANY.

KEMIX® (PTY) LTD
47 KYALAMI BLVD, KYALAMI BUSINESS PARK
JOHANNESBURG, SOUTH AFRICA
P.O. BOX 31949, KYALAMI, 1684
TEL. (+27 11) 466 2490
FAX (+27 11) 466 2190
E-MAIL: kemix@kemix.com
WEB: www.kemix.com

TITLE: LAUNDER GATE AND POCKET ASSEMBLY

SHEET SIZE:	SCALE:	SHEET NO:	DRAWING NO:	REV:
A1		2 OF 3	-	0

STEP 6:

NB! KEEP THE LAUNDER GATE CONNECTED TO THE CRANE UNTIL ALL ASSEMBLY STEPS HAVE BEEN PERFORMED.

- USING A SUITABLE SOCKET WRENCH / SPANNER, ROTATE THE LAUNDER GATE JACKING WEDGE THREADED ROD (THIS ACTION RAISES OR LOWERS THE LAUNDER GATE JACKING WEDGES).
- ROTATE THE THREADED ROD UNTIL THE LAUNDER GATE JACKING WEDGES AND POCKET WEDGES ARE ENGAGED (IT IS RECOMMENDED THAT BOTH THREADED RODS ARE ROTATED SIMULTANEOUSLY AS THIS WILL ENSURE A UNIFORM SEAL IS ACHIEVED)
- LOWER THE CRANE UNTIL THERE IS SLACK ON THE SLINGS / CHAINS - DO NOT DETACH THE THE SLINGS / CHAINS AS YET.
- FURTHER ROTATE THE THREADED ROD UNTIL AN ADEQUATE SEAL HAS BEEN ACHIEVED BETWEEN THE LAUNDER GATE SEALING FACE AND COMPRESSED LAUNDER GATE GASKET. KEMIX RECOMMENDS THE LAUNDER GATE IS POSITIONED APPROXIMATELY 10mm TO 15mm FROM THE POCKET SEALING FACE.
- DETACH THE CRANE FROM THE LAUNDER GATE.

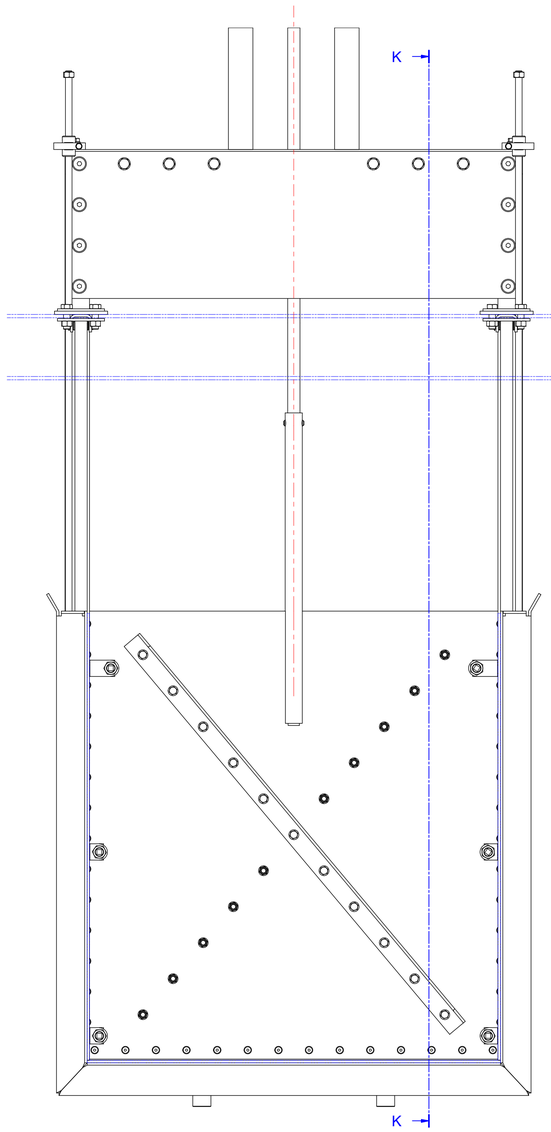

FRONT VIEW
(1 : 7.5)

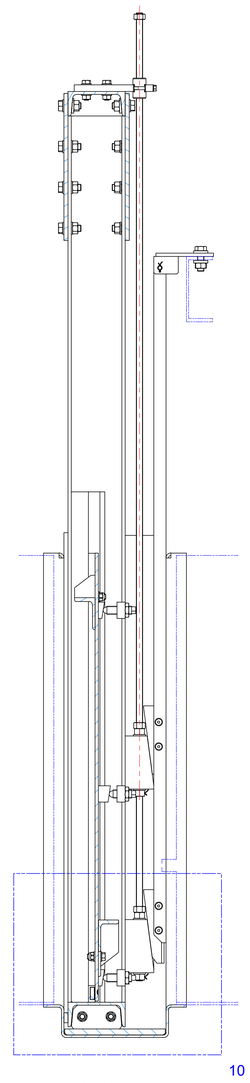

SECTION K-K
(1 : 7.5)

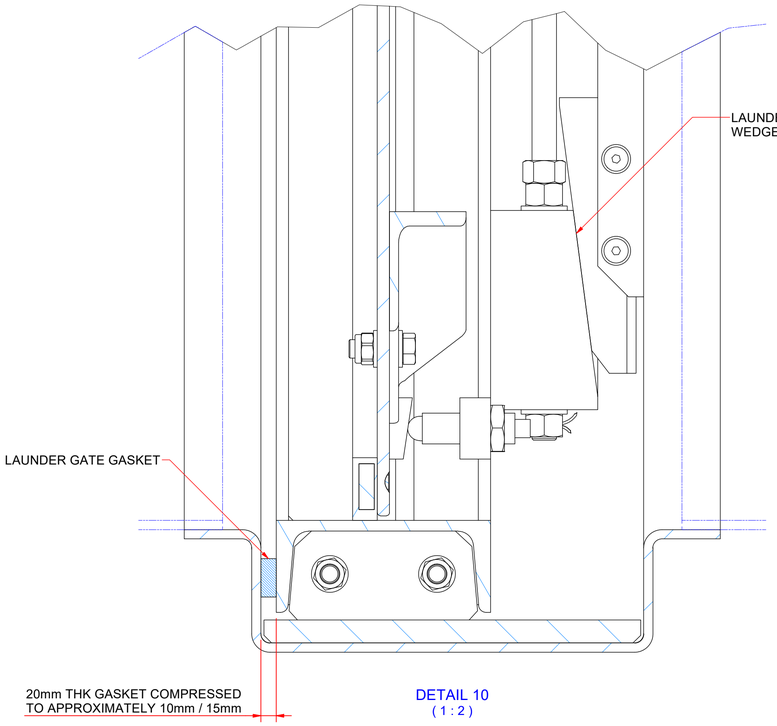

DETAIL 10
(1 : 2)

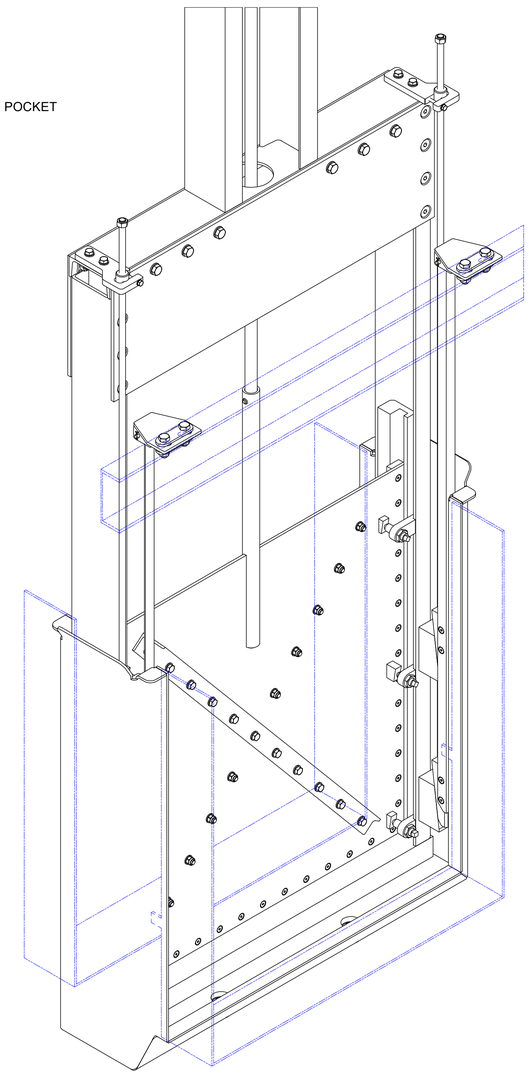

DRAWING NO:	REFERENCE DRAWING TITLE:	REV:	NAME:	DATE:	DESCRIPTION:

DRAWN BY: B.Harvey
DATE: 20 Jan 2022
ENGINEER:
MODEL:
SIZE 1:
SIZE 2:
SIZE 3:

CLIENT: KEMIX

PROJECT: KEMIX

THIS DRAWING IS THE PROPERTY OF KEMIX (PTY) LTD AND MAY NOT BE COPIED OR REPRODUCED EITHER WHOLLY OR IN PART WITHOUT THE WRITTEN PERMISSION OF THE AFOREMENTIONED COMPANY.

KEMIX® (PTY) LTD
47 KYALAMI BLVD, KYALAMI BUSINESS PARK
JOHANNESBURG, SOUTH AFRICA
P.O. BOX 31949, KYALAMI, 1684
TEL. (+27 11) 466 2490
FAX (+27 11) 466 2190
E-MAIL: kemix@kemix.com
WEB: www.kemix.com

TITLE: LAUNDER GATE AND POCKET ASSEMBLY

SHEET SIZE:	SCALE:	SHEET NO:	DRAWING NO:	REV:
A1		3 OF 3	-	0

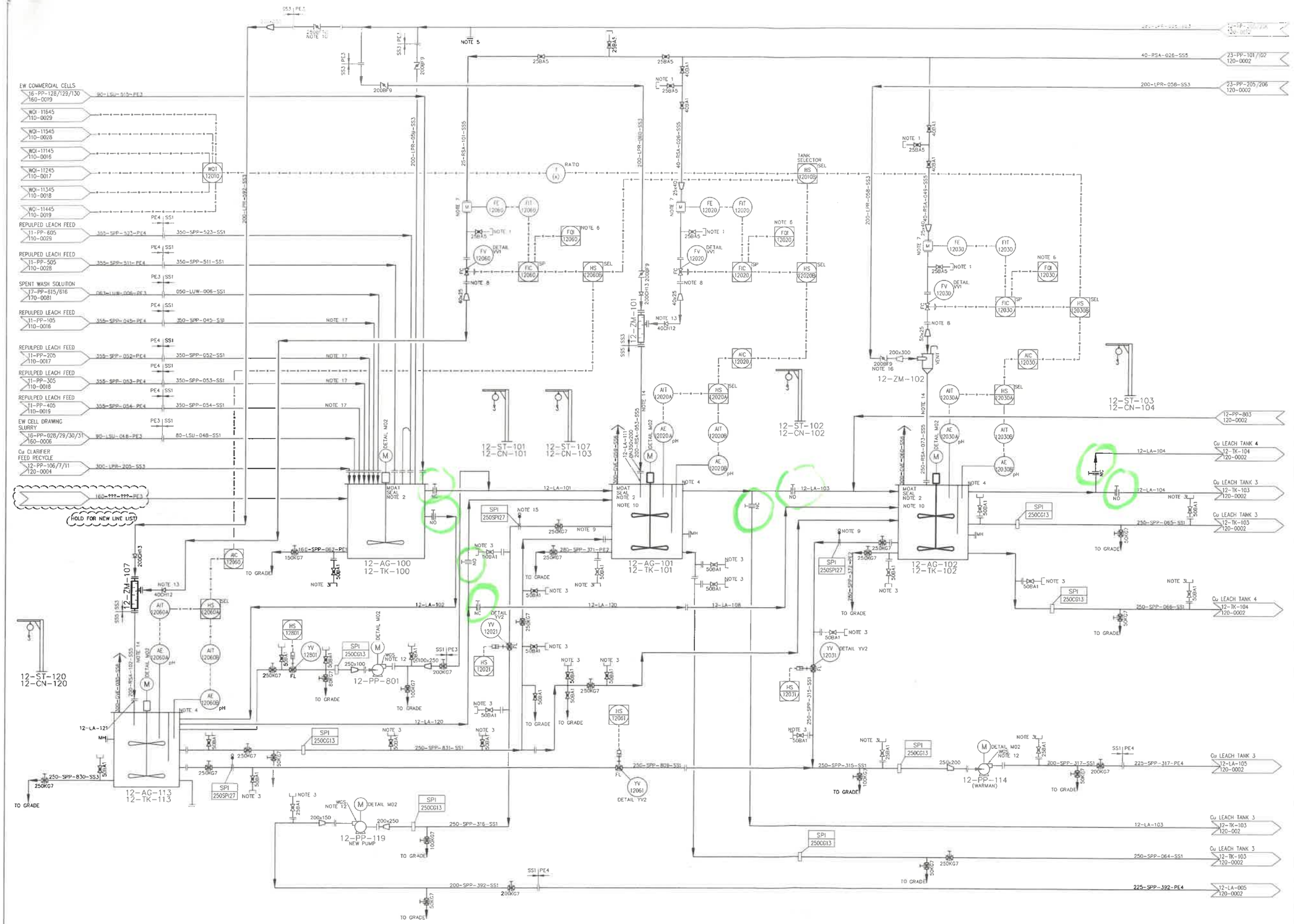

EQUIPMENT LIST

NUMBER EQUIPMENT	DESCRIPTION	CAPACITY VALUE	CAPACITY UNIT	POWER (kW)
12-AG-100	COPPER LEACH FEED TANK AGITATOR			30
12-AG-101	COPPER LEACH TANK 1 AGITATOR			90
12-AG-102	COPPER LEACH TANK 2 AGITATOR			90
12-AG-113	COPPER LEACH TANK 5 AGITATOR			90
12-CN-101	COPPER LEACH FEED LAUNDER 1 DAVIT HOIST			
12-CN-102	COPPER LEACH INTERTANK LAUNDER 1 DAVIT HOIST			
12-CN-103	COPPER LEACH FEED LAUNDER 2 DAVIT HOIST			
12-CN-104	COPPER LEACH INTERTANK LAUNDER 2 DAVIT HOIST			
12-CN-120	COPPER LEACH LAUNDER 4 DAVIT HOIST			
12-LA-101	COPPER LEACH FEED TANK LAUNDER 1			N/A
12-LA-102	COPPER LEACH FEED LAUNDER 2A			N/A
12-LA-103	COPPER LEACH INTERTANK LAUNDER 1			N/A
12-LA-104	COPPER LEACH INTERTANK LAUNDER 2			N/A
12-LA-108	COPPER LEACH FEED LAUNDER 2B			N/A
12-LA-109	COPPER LEACH FEED LAUNDER 2C			N/A
12-LA-111	COPPER LEACH TANK 1 INLINE MIXER DISCHARGE LAUNDER			N/A
12-LA-120	COPPER LEACH INTERTANK LAUNDER 4			
12-LA-121	COPPER LEACH TANK 5 INLINE MIXER DISCHARGE LAUNDER			
12-PP-114	COPPER LEACH DESANDING PUMP 2	265	m³/h	18.5
12-PP-119	COPPER LEACH DESANDING PUMP 3	265	m³/h	18.5
12-PP-801	DE-SANDING PUMP		m³/h	18.5
12-ST-101	COPPER LEACH FEED LAUNDER 1 DAVIT			
12-ST-102	COPPER LEACH INTERTANK LAUNDER 1 DAVIT			
12-ST-103	COPPER LEACH INTERTANK LAUNDER 2 DAVIT			
12-ST-107	COPPER LEACH FEED LAUNDER 2 DAVIT			
12-ST-120	COPPER LEACH INTERTANK LAUNDER 4 DAVIT			
12-TK-100	COPPER LEACH FEED TANK	20	m3	N/A
12-TK-101	COPPER LEACH TANK 1	1000	m3	N/A
12-TK-102	COPPER LEACH TANK 2	1000	m3	N/A
12-TK-113	COPPER LEACH TANK 5	1000	m3	N/A
12-ZM-101	COPPER LEACH TANK 1 SULPHURIC ACID IN-LINE MIXER			N/A
12-ZM-102	COPPER LEACH TANK 2 SULPHURIC ACID DILUTION POT			N/A
12-ZM-107	COPPER LEACH TANK 5 SULPHURIC ACID IN-LINE MIXER			

NOTES:

1. ALL DRAINS ON RSA LINES TO BE PLUGGED.
2. REFER LEACHING AREA MOAT SEAL P&ID 120-PI-019.
3. ALL __BAT FLUSHING VALVES PIPING TO BE SS1 SPEC.
4. ANALYTICAL ELEMENTS TO BE LOCATED IN TANK RISER.
5. BLANK FOR FUTURE TANKS.
6. INDIVIDUAL ACID FLOWS ADDED FOR TOTAL ACID FLOW CALCULATION.
7. FLANGES FOR MAGFLOWS TO DIN STANDARD.
8. DIN2501 PN25 FLANGES.
9. NEW DESANDING PUMP AND ASSOCIATE PIPING TO TIE-IN ON EXISTING DN250 NOZZLE ALLOCATED FOR THIS PURPOSE (120-M-012.)
10. 105ktpa EXPANSION TIE-IN POINT.
11. FUTURE LEACH TANK INTERCONNECTING LAUNDERS TIE-IN TO EXISTING TANKS.
12. REFER TO GLAND WATER P&ID 240-0014.
13. PTFE OR PVDF LINED SPOOL PIECE.
14. LEAD LINED, SEE MECH DWG 120-M-017.
15. NEW VALVE.
16. VALVE ALREADY INSTALLED AS PER EXISTING LYCOPODIUM ISO.
17. SS1 PIPE ON SPP APPLICATION TO BE NORDBAK LINED.

INSTRUMENT LINE LEGEND

- CONNECTION TO PROCESS
- PNEUMATIC SIGNAL
- ELECTRICAL
- GUIDED ELECTROMAGNETIC SIGNAL
- HYDRAULIC SIGNAL
- SOFTWARE SIGNAL
- CAPILLARY TUBE SIGNAL

PROCESS LINE LEGEND

- NEW LINES
- NEW INTERMITTENT
- VENDOR SUPPLY
- FUTURE LINES
- EXISTING DESIGN
- EXISTING INTERMITTENT

DOC CONTROL
By Melissa at 11:01 06 04/11/2021

DRG No	REFERENCE DRAWINGS	No	DATE	REVISIONS	DRN	CHK'D	DESIGN	DESIGN APP'D	PROJ APP'D	CLIENT APP'D
		10	2022-10-26	AS BUILT	NS	JS		RB	GL	

DRAWN	CHECKED	DESIGN	SENIOR ENG	DESIGN APP'D	PROJ APP'D	CLIENT APP'D

METALKOL RTR

ROAN TAILINGS RECLAMATION PROJECT

This Drawing and its contents are confidential, are subject to return on demand and may not be copied or disclosed to any third party or used directly or indirectly for any other purpose other than as determined in writing by propriety agreement by the relevant party.

DRAWING TITLE
PROCESS
AREA 120 – LEACHING
COPPER LEACH CIRCUIT (SHEET 1 OF 2)
PIPING AND INSTRUMENTATION DIAGRAM

SCALE	JOB No.	REFERENCE No.	REV.
N.T.S.	P31	Z00201-HDR-PRO-120-PID-001-01	10

DRAWN	DATE	DWG No.
PB	2021-11-24	150127-120-49D4-0001

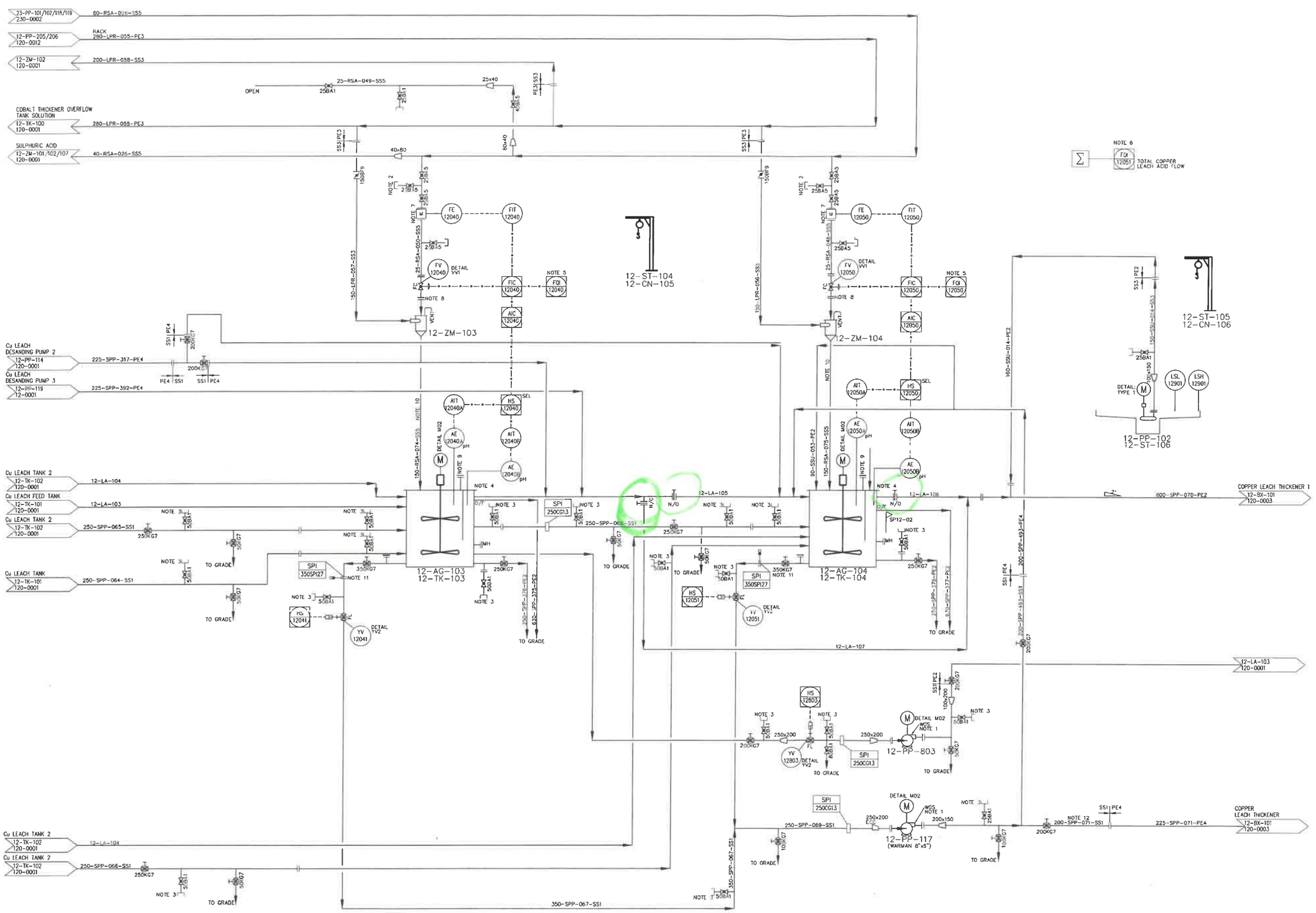

NUMBER EQUIPMENT	DESCRIPTION	CAPACITY VALUE	CAPACITY UNIT	POWER (kW)
12-AG-103	COPPER LEACH TANK 3 AGITATOR			90
12-AG-104	COPPER LEACH TANK 4 AGITATOR			90
12-[illegible]	COPPER LEACH INTERTANK LAUNDER 3 DAVIT HOIST			-
12-CN-10[illegible]	COPPER LEACH DISCHARGE LAUNDER DAVIT HOIST			-
12-LA-105	COPPER LEACH INTERTANK LAUNDER 3			N/A
12-LA-106	COPPER LEACH DISCHARGE LAUNDER 1			N/A
12-LA-107	COPPER LEACH DISCHARGE LAUNDER 2			N/A
12-PP-102	COPPER LEACH AREA SUMP PUMP 2	160	m3/h	55
12-PP-117	COPPER LEACH DESANDING PUMP 3	245	m3/h	18.5
12-PP-803	COPPER LEACH DESANDING PUMP		m3/h	18.5
12-ST-104	COPPER LEACH INTERTANK LAUNDER 3 DAVIT			-
12-ST-105	COPPER LEACH DISCHARGE LAUNDER DAVIT			-
12-ST-106	COPPER LEACH AREA SUMP PUMP 2 SUPPORT FRAME			-
12-TK-103	COPPER LEACH TANK 3	1000	m3	N/A
12-TK-104	COPPER LEACH TANK 4	1000	m3	N/A
12-ZM-103	COPPER LEACH TANK 3 SULPHURIC ACID DILUTION POT			
12-ZM-104	COPPER LEACH TANK 4 SULPHURIC ACID DILUTION POT			

NOTES:

1. REFER GLAND WATER P&ID 240-PI-014.
2. ALL DRAINS ON RSA LINES TO BE PLUGGED.
3. ALL ___BAI FLUSHING VALVES PIPING TO BE SS1 (TYP) SPEC.
4. ANALYTICAL ELEMENTS TO BE LOCATED IN TANK RISER.
5. INDIVIDUAL ACID FLOWS ADDED FOR TOTAL ACID FLOW CALCULATION.
6. TOTAL COPPER LEACH ACID FLOW CALCULATED.
7. FLANGES FOR MAGFLOWS TO DIN STANDARD.
8. DIN2501 PN25 FLANGES.
9. ROOF REQUIRED WITH OFF-GAS VENT TIE-IN FOR 105ktpa EXPANSION.
10. LEAD LINED.
11. NEW VALVE.
12. SS1 PIPES ON SPP APPLICATION TO BE LINED.

INSTRUMENT LINE LEGEND

- CONNECTION TO PROCESS
- PNEUMATIC SIGNAL
- ELECTRICAL
- GUIDED ELECTROMAGNETIC SIGNAL
- HYDRAULIC SIGNAL
- SOFTWARE SIGNAL
- CAPILLARY TUBE SIGNAL

PROCESS LINE LEGEND

- NEW LINES
- NEW INTERMITTENT
- VENDOR SUPPLY
- FUTURE LINES
- EXISTING DESIGN
- EXISTING INTERMITTENT

DOC CONTROL
By ldeluca at 11:08:43, 04/11/2022

DRAWN	CHECKED	DESIGN	SENIOR ENG	DESIGN APP'D	PROJ APP'D	CLIENT APP'D

DRG No	REFERENCE DRAWINGS	No	DATE	REVISIONS	DRN	CHK'D	DESIGN	DESIGN APP'D	PROJ APP'D	CLIENT APP'D
		10	2022-04-22	AS BUILT	NS	JS		RB	GL	

This Drawing and its contents are confidential, are subject to return on demand and may not be copied or disclosed to any third party or used directly or indirectly for any other purpose other than as determined in writing by property agreement by the relevant party.

METALKOL RTR

ROAN TAILINGS RECLAMATION PROJECT

DRAWING TITLE
PROCESS
AREA 120 - LEACHING
COPPER LEACH CIRCUIT (SHEET 2 OF 2)
PIPING AND INSTRUMENTATION DIAGRAM

SCALE	JOB No.	REFERENCE No.	REV.
N.T.S.	P31	200201-HDR-PRO-120-PID-002-01	10
DRAWN: PB	DATE: 2021-11-26	DWG No. 150127-120-49D4-0002	

EQUIPMENT LIST

NUMBER EQUIPMENT	DESCRIPTION	CAPACITY VALUE	CAPACITY UNIT	POWER (kW)
12-AG-200	COBALT LEACH FEED TANK A AGITATOR			30
12-AG-221	COBALT LEACH TANK 6A AGITATOR			90
12-CN-203	COBALT LEACH FEED LAUNDER 2A DAVIT HOIST			
12-CN-216	COBALT LEACH FEED LAUNDER 5A DAVIT HOIST			
12-CN-218	COBALT LEACH INTERTANK LAUNDER 5A DAVIT HOIST			
12-CN-219	COBALT LEACH INTERTANK LAUNDER 6A DAVIT HOIST			
12-LA-202	COBALT LEACH FEED LAUNDER 2A			N/A
12-LA-212	COBALT LEACH TRAIN A SAMPLER DISCHARGE LAUNDER			N/A
12-LA-216	COBALT LEACH FEED LAUNDER 5A			
12-LA-217	COBALT LEACH FEED LAUNDER 6A			
12-LA-218	COBALT LEACH INTERTANK LAUNDER 5A			
12-LA-219	COBALT LEACH INTERTANK LAUNDER 6A			
12-LA-221	COBALT LEACH TANK 6A INLINE MIXER DISCHARGE LAUNDER			
12-PP-807	COBALT LEACH DESANDING PUMP		m³/h	18.5
12-SA-201	COBALT LEACH TRAIN A FEED PRIMARY SAMPLER			0.37
12-SA-202	COBALT LEACH TRAIN A FEED SECONDARY SAMPLER			0.37
12-ST-200	COBALT LEACH FEED LAUNDER 1A DAVIT			
12-ST-201	COBALT LEACH FEED LAUNDER 2A DAVIT			
12-ST-216	COBALT LEACH FEED LAUNDER 5A DAVIT			
12-ST-218	COBALT LEACH INTERTANK LAUNDER 5A DAVIT			
12-ST-219	COBALT LEACH INTERTANK LAUNDER 6A DAVIT			
12-TK-200	COBALT LEACH FEED TANK A	38	m³	N/A
12-TK-221	COBALT LEACH TANK 6A	1000	m³	N/A
12-ZM-211	COBALT LEACH TANK 6A SULPHURIC ACID INLINE MIXER			
12-ZM-221	COBALT LEACH TANK 6A SO2 SPARGER			

NOTES:

1. ALL DRAINS ON RSA LINES TO BE PLUGGED.
2. REFER LEACHING AREA SEAL P& ID 120-PI-019.
3. ALL ___RAI FLUSHING VALVES SS1 SPEC.
4. ANALYTICAL ELEMENTS TO BE LOCATED IN TANK RISER.
5. SULPHUR DIOXIDE GAS LINE FLUSHING POINT USED FOR INSTRUMENT AIR CONNECTION.
6. VALVES CANNOT BE OPENED UNLESS SUFFICIENT SO2 GAS LINE PRESSURE MEASURED BY PI-12220.
7. INDIVIDUAL ACID FLOWS ADDED FOR TOTAL ACID FLOW CALCULATION.
8. FLANGES TO DIN STANDARD.
9. DIN2501 PN25 FLANGES.
10. 316 S/S BLIND FLANGE.
11. NEW DESANDING PUMP NOZZLE REQUIRED.
12. PTFE LINED.
13. PTFE OR PVDF LINED SPOOL PIECE.
14. REFER TO GLAND WATER P&ID 240-0014.

INSTRUMENT LINE LEGEND

- CONNECTION TO PROCESS
- PNEUMATIC SIGNAL
- ELECTRICAL
- GUIDED ELECTROMAGNETIC SIGNAL
- HYDRAULIC SIGNAL
- SOFTWARE SIGNAL
- CAPILLARY TUBE SIGNAL

PROCESS LINE LEGEND

- NEW LINES
- NEW INTERMITTENT
- VENDOR SUPPLY
- FUTURE LINES
- EXISTING DESIGN
- EXISTING INTERMITTENT

DOC CONTROL
By ldeluca at 11:13:08, 04/11/2022

DRAWN	CHECKED	DESIGN	SENIOR ENG	DESIGN APP'D	PROJ APP'D	CLIENT APP'D

DRG No	REFERENCE DRAWINGS	No	DATE	REVISIONS	DRN	CHK'D	DESIGN	DESIGN APP'D	PROJ APP'D	CLIENT APP'D
		10	2022-10-25	AS BUILT	NS	JS		RB	GL	

This Drawing and its contents are confidential, are subject to return on demand and may not be copied or disclosed to any third party or used directly or indirectly for any other purpose other than as determined in writing by propriety agreement, by the relevant party.

METALKOL RTR

rtr ROAN TAILINGS RECLAMATION PROJECT

DRAWING TITLE
PROCESS
AREA 120 - LEACHING
COBALT LEACH TRAIN A (SHEET 1 OF 4)
PIPING AND INSTRUMENTATION DIAGRAM

SCALE	JOB No.	REFERENCE No.	REV.
N.T.S.	P31	200201-HDR-PRO-120-PID-006-01	10

DRAWN	DATE	DWG No.
PB	2021-12-07	150127-120-49D4-0006

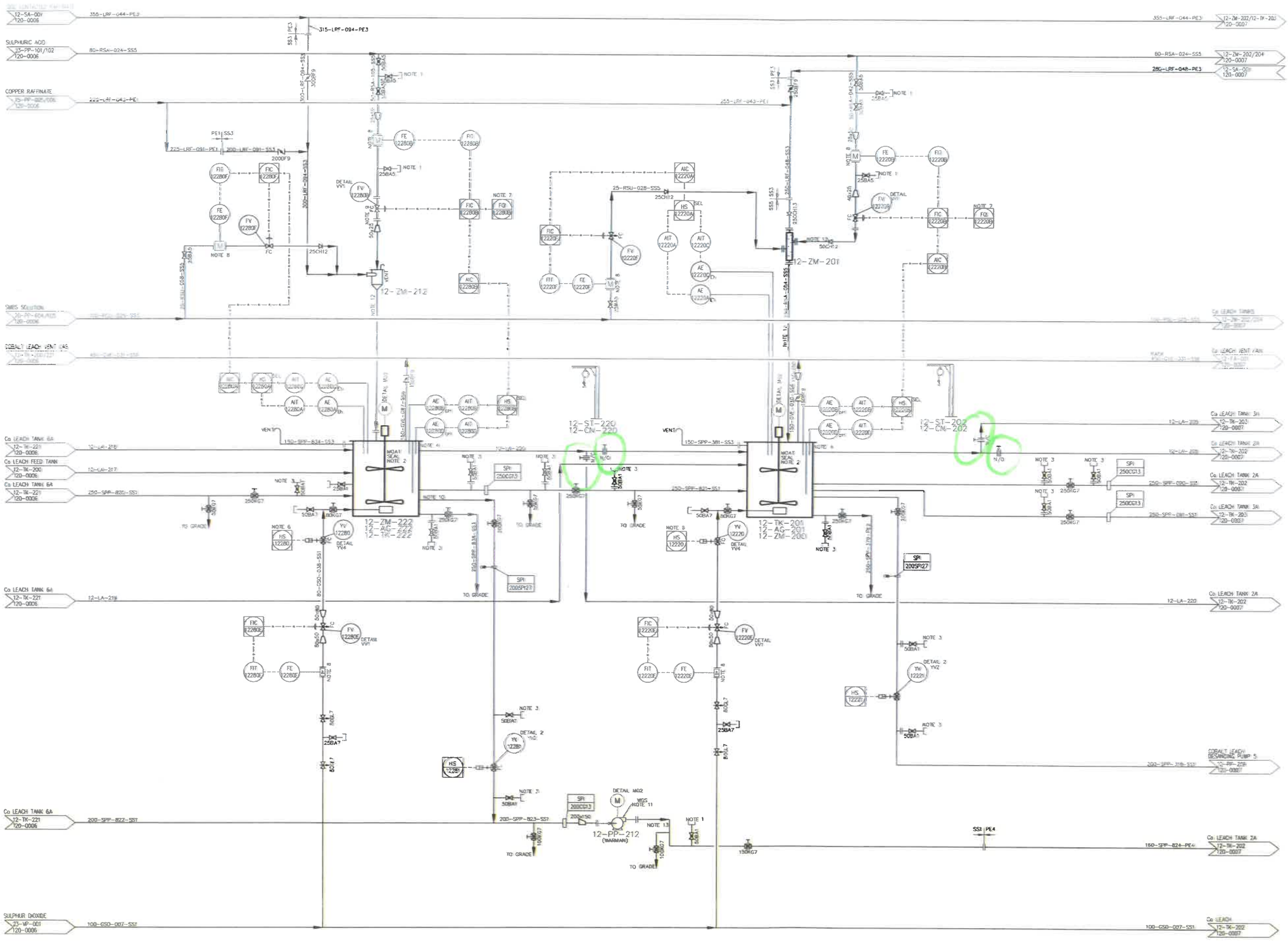

EQUIPMENT LIST

NUMBER	DESCRIPTION	CAPACITY	UNIT	POWER (kW)
12-AG-222	COBALT LEACH: TANK 7A AGITATOR			90
12-AG-201	COBALT LEACH: TANK 1A AGITATOR			90
12-CN-202	COBALT LEACH: INTERTANK LAUNDER 1A DAM HOIST			
12-CN-220	COBALT LEACH: INTERTANK LAUNDER 7A DAM HOIST			
12-ST-202	COBALT LEACH: INTERTANK LAUNDER 1A DAM			
12-ST-220	COBALT LEACH: INTERTANK LAUNDER 7A DAM			
12-LA-205	COBALT LEACH: INTERTANK LAUNDER 1A			N/A
12-LA-220	COBALT LEACH: INTERTANK LAUNDER 7A			
12-PP-212	COBALT LEACH: DESANDING PUMP 7	200	m³/h	18.5
12-TK-222	COBALT LEACH: TANK 7A	1000	m³	N/A
12-TK-201	COBALT LEACH: TANK 1A	1000	m³	N/A
12-ZM-200	COBALT LEACH: TANK 1A SULPHURIC ACID DILUTION POT			
12-ZM-201	COBALT LEACH: TANK 1A SO2 SPARGER			
12-ZM-212	COBALT LEACH: 7A SULPHURIC ACID DILUTION POT			
12-ZM-222	COBALT LEACH: TANK 7A SO2 SPARGER			

NOTES:

1. ALL DRAINS ON RSA LINES TO BE PLUGGED.
2. REFER LEACHING AREA SEAL PLAN 12-PR-019.
3. ALL ___BAT FLUSHING VALVES PIPING TO BE SS1 SPEC.
4. ANALYTICAL ELEMENTS TO BE LOCATED IN TANK RISER.
5. ATMOSPHERIC SO2/S4 GAS MONITORS TO BE INSTALLED AT THE TOP OF TANK LEVEL.
6. VALVE CANNOT BE OPENED UNLESS THERE IS SUFFICIENT SO2 GAS LINE PRESSURE MEASURED BY PI-12220 ON 120-PI-006.
7. INDIVIDUAL ACID FLOWS ADDED FOR TOTAL ACID FLOW CALCULATION.
8. FLANGES TO DIN STANDARD.
9. DIN2501 PN25 FLANGES.
10. NEW DESANDING PUMP NOZZLE REQUIRED.
11. REFER TO GLAND WATER P&ID. 240-0014.
12. PTFE LINED.
13. SS1 PIPE ON SPP APPLICATIONS TO BE LINED.

INSTRUMENT LINE LEGEND

- CONNECTION TO PROCESS
- PNEUMATIC SIGNAL
- ELECTRICAL
- GUIDED ELECTROMAGNETIC SIGNAL
- HYDRAULIC SIGNAL
- SOFTWARE SIGNAL
- CAPILLARY TUBE SIGNAL

PROCESS LINE LEGEND

- NEW LINES
- *NEW INTERMITTENT
- VENDOR SUPPLY
- FUTURE LINES
- EXISTING DESIGN
- EXISTING INTERMITTENT

DOC CONTROL
By Idaliaca at 11:30:36, 04/11/2022

DRG No	REFERENCE DRAWINGS

No	DATE	REVISIONS	DRN	CHK'D	DESIGN	DESIGN APP'D	PROJ APP'D	CLIENT APP'D
10	2022-10-25	AS BUILT	NS	JS		RB	GL	

DRAWN	CHECKED	DESIGN	SENIOR ENG	DESIGN APP'D	PROJ APP'D	CLIENT APP'D

METALKOL RTR

ROAN TAILINGS RECLAMATION PROJECT

This Drawing and its contents are confidential, are subject to return on demand and may not be copied or disclosed to any third party or used directly or indirectly for any other purpose other than as determined in writing by propriety agreement by the relevant party.

DRAWING TITLE
PROCESS
AREA 120 – LEACHING
COBALT LEACH TRAIN A (SHEET 4 OF 4)
PIPING AND INSTRUMENTATION DIAGRAM

SCALE	JOB No.	REFERENCE No.	REV.
N.T.S.	P31	200201-HDR-PRO-120-PID-022-0	10

DRAWN	DATE	DWG No.
PB	2021-12-07	150127-120-49D4-0022

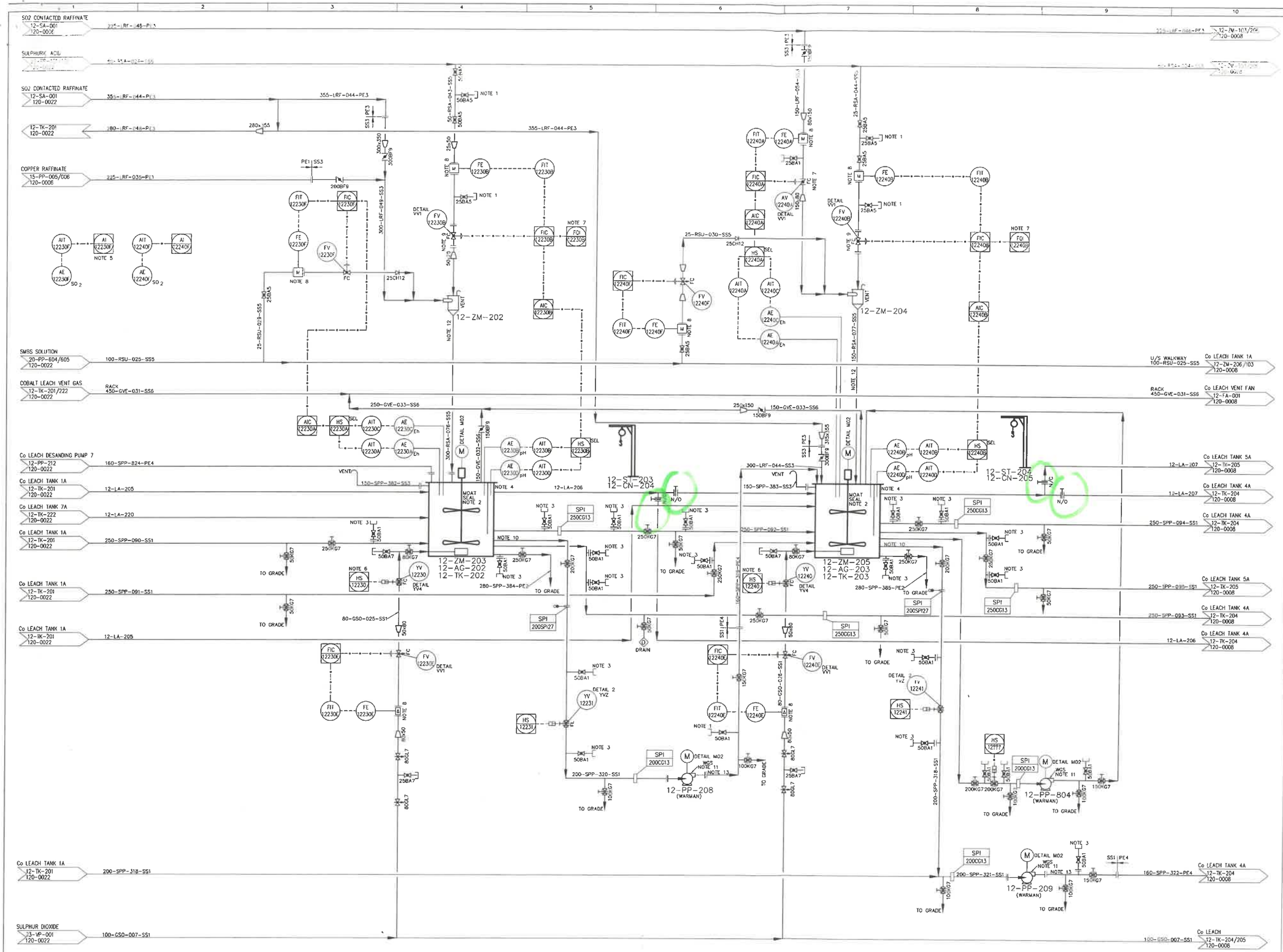

EQUIPMENT LIST

NUMBER EQUIPMENT	DESCRIPTION	CAPACITY VALUE	CAPACITY UNIT	POWER (kW)
12-AG-202	COBALT LEACH TANK 2A AGITATOR			90
12-AG-203	COBALT LEACH TANK 3A AGITATOR			90
12-TK-204	COBALT LEACH INTERTANK LAUNDER 2A DAVIT HOIST			
12-CN-205	COBALT LEACH INTERTANK LAUNDER 3A DAVIT HOIST			
12-LA-203	COBALT LEACH FEED LAUNDER 2			
12-LA-205	COBALT LEACH INTERTANK LAUNDER 1A			
12-LA-206	COBALT LEACH INTERTANK LAUNDER 2A			N/A
12-LA-207	COBALT LEACH INTERTANK LAUNDER 3A			N/A
12-PP-208	COBALT LEACH DESANDING PUMP 3	130	m3/h	18.5
12-PP-209	COBALT LEACH DESANDING PUMP 5	130	m3/h	18.5
12-PP-804	COBALT LEACH TANK 3A SO2 SPARGER		m3/h	18.5
12-ST-203	COBALT LEACH INTERTANK LAUNDER 2A DAVIT			
12-ST-204	COBALT LEACH INTERTANK LAUNDER 3A DAVIT			
12-TK-202	COBALT LEACH TANK 2A	1000	m3	N/A
12-TK-203	COBALT LEACH TANK 3A	1000	m3	N/A
12-ZM-202	COBALT LEACH TANK 2A SULPHURIC ACID			
12-ZM-203	DILUTION POT COBALT LEACH TANK 2A SO2 SPARGER			
12-ZM-204	COBALT LEACH 3A SULPHURIC ACID DILUTION POT			
12-ZM-205	COBALT LEACH TANK 3A SO2 SPARGER			

NOTES:

1. ALL DRAINS ON RSA LINES TO BE PLUGGED.
2. REFER LEACHING AREA SEAL P&ID 120-PI-019.
3. ALL ___BAI FLUSHING VALVES PIPING TO BE SS1 SPEC.
4. ANALYTICAL ELEMENTS TO BE LOCATED IN TANK RISER.
5. ATMOSPHERIC SO254 GAS MONITORS TO BE INSTALLED AT THE TOP OF TANK LEVEL.
6. VALVE CANNOT BE OPENED UNLESS THERE IS SUFFICIENT SO2 GAS LINE PRESSURE MEASURED BY PI-12220 ON 120-PI-006.
7. INDIVIDUAL ACID FLOWS ADDED FOR TOTAL ACID FLOW CALCULATION.
8. FLANGES TO DIN STANDARD.
9. DIN2501 PN25 FLANGES.
10. NEW DESANDING PUMP NOZZLE REQUIRED.
11. REFER TO GLAND WATER P&ID 240-0014.
12. PTFE LINED.
13. SS1 PIPE ON SPP APPLICATIONS TO BE LINED.

INSTRUMENT LINE LEGEND

- CONNECTION TO PROCESS
- PNEUMATIC SIGNAL
- ELECTRICAL
- GUIDED ELECTROMAGNETIC SIGNAL
- HYDRAULIC SIGNAL
- SOFTWARE SIGNAL
- CAPILLARY TUBE SIGNAL

PROCESS LINE LEGEND

- NEW LINES
- NEW INTERMITTENT
- VENDOR SUPPLY
- FUTURE LINES
- EXISTING DESIGN
- EXISTING INTERMITTENT

DOC CONTROL
By Ideluca at 11:13:58, 04/11/2022

DRAWN	CHECKED	DESIGN	SENIOR ENG	DESIGN APP'D	PROJ APP'D	CLIENT APP'D

DRG No	REFERENCE DRAWINGS	No	DATE	REVISIONS	DRN	CHK'D	DESIGN	DESIGN APP'D	PROJ APP'D	CLIENT APP'D
		10	2022-10-25	AS BUILT	NS	JS		RB	GL	

METALKOL RTR

ROAN TAILINGS RECLAMATION PROJECT

This Drawing and its contents are confidential, are subject to return on demand and may not be copied or disclosed to any third party or used directly or indirectly for any other purposes other than as determined in writing by propriety agreement by the relevant party.

DRAWING TITLE
PROCESS
AREA 120 – LEACHING
COBALT LEACH TRAIN A (SHEET 2 OF 4)
PIPING AND INSTRUMENTATION DIAGRAM

SCALE	JOB No.	REFERENCE No.	REV.
N.T.S.	P31	200201-HDR-PRO-120-PID-007-01	10

DRAWN	DATE	DWG No.
PB	2021-11-29	150127-120-49D4-0007

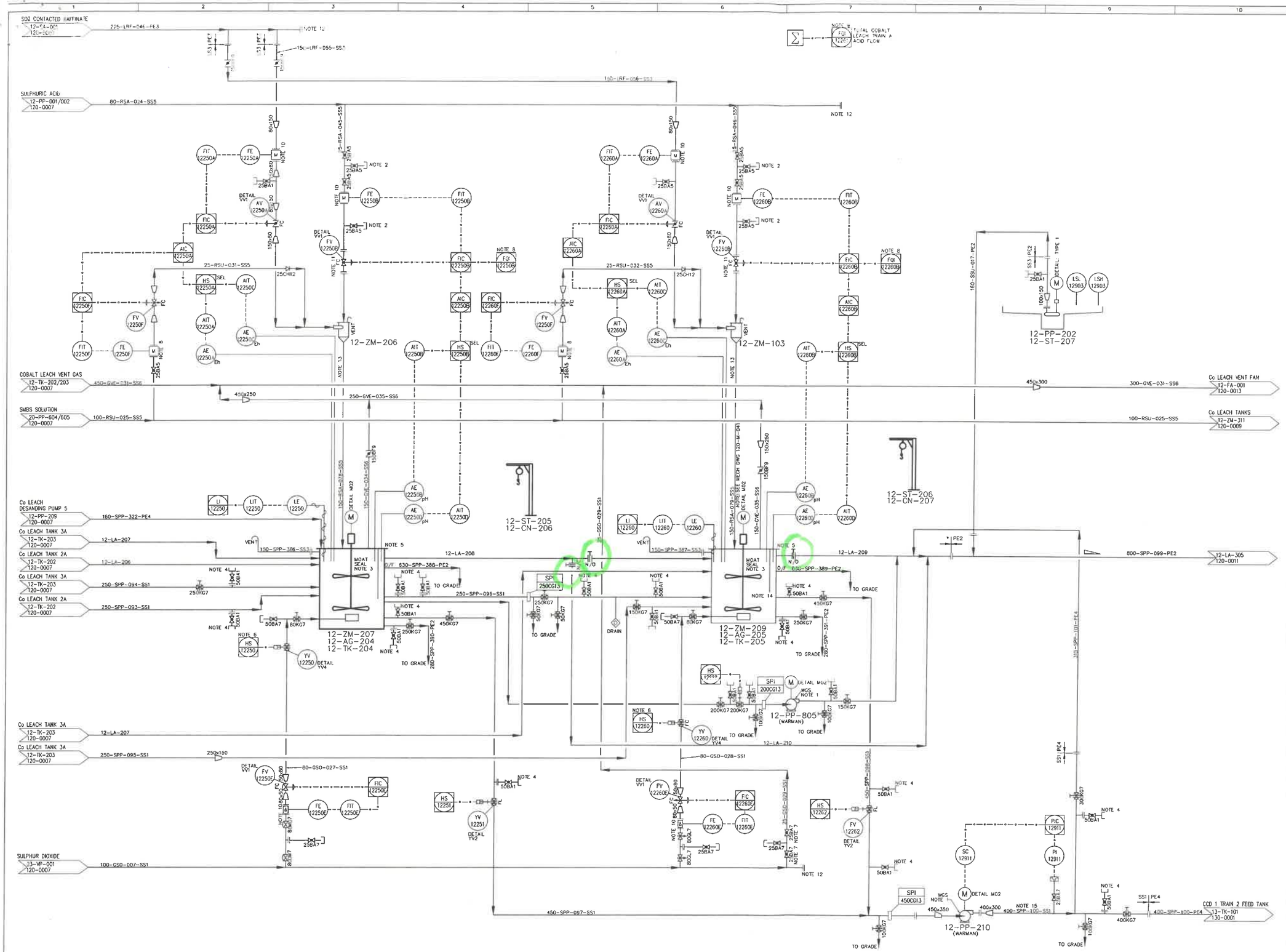

EQUIPMENT LIST

NUMBER EQUIPMENT	DESCRIPTION	CAPACITY VALUE	CAPACITY UNIT	POWER (kW)
12-AG-204	COBALT LEACH TANK 4A AGITATOR			90
12-AG-205	COBALT LEACH TANK 5A AGITATOR			90
12-AG-206	COBALT LEACH INTERTANK LAUNDER 1A DAVIT HOIST			
12-CN-201	COBALT LEACH DISCHARGE LAUNDER 1A DAVIT HOIST			
12-LA-206	COBALT LEACH INTERTANK LAUNDER 2A			
12-LA-207	COBALT LEACH INTERTANK LAUNDER 3A			
12-LA-208	COBALT LEACH INTERTANK LAUNDER 4A			N/A
12-LA-209	COBALT LEACH DISCHARGE LAUNDER 1A			N/A
12-LA-210	COBALT LEACH DISCHARGE LAUNDER 2A			N/A
12-PP-202	COBALT LEACH AREA SUMP PUMP 1	160	m3/h	55
12-PP-210	COBALT LEACH DESANDING PUMP	1235	m3/h	100
12-PP-805	COBALT LEECH DESANDING PUMP		m3/h	18.5
12-ST-205	COBALT LEACH INTERTANK LAUNDER 4A DAVIT			
12-ST-206	COBALT LEACH DISCHARGE LAUNDER 1A HOIST			
12-ST-207	COBALT LEACH AREA SUMP PUMP 1 SUPPORT FRAME			
12-TK-204	COBALT LEACH TANK 4A	1000	m3	N/A
12-TK-205	COBALT LEACH TANK 5A	1000	m3	N/A
12-ZM-206	COBALT LEACH TANK 4A SULPHURIC ACID DILUTION POT			
12-ZM-207	COBALT LEACH TANK 4A SO2 SPARGER			
12-ZM-208	COBALT LEACH TANK 5A SULPHURIC ACID DILUTION POT			
12-ZM-209	COBALT LEACH TANK 5A SO2 SPARGER			

NOTES:

1. REFER GLAND WATER P&ID 240-PI-014
2. ALL DRAINS ON RSA LINES TO BE PLUGGED.
3. REFER LEACHING AREA SEAL P&ID 120-PI-019.
4. ALL ___BA1 FLUSHING VALVES PIPING TO BE SS1 SPEC.
5. ANALYTICAL ELEMENTS TO BE LOCATED IN TANK RISER
6. VALVE CANNOT BE OPENED UNLESS SUFFICIENT SO254 GAS LINE PRESSURE MEASURED BY PI-12220 ON 120-PI-006.
7. SULPHUR DIOXIDE GAS LINE FLUSHING POINT WITH LOCKABLE VALVE.SO2 GAS LINE FLUSHED WITH INSTRUMENT AIR (REFER NOTE 5, 120-PI-006) INTO 12-TK-205-VOID SPACE.
8. INDIVIDUAL ACID FLOWS ADDED FOR TOTAL ACID FLOW CALCULATION.
9. TOTAL COBALT LEACH TRAIN A ACID FLOW CALCULATED.
10. FLANGES TO DIN STANDARD.
11. DIN2501 PN25 FLANGES.
12. 316 S/S BLIND FLANGE.
13. LEAD LINED.
14. NEW VALVE.
15. SS1 PIPE ON SPP APPLICATION TO BE LINED.

INSTRUMENT LINE LEGEND

- CONNECTION TO PROCESS
- PNEUMATIC SIGNAL
- ELECTRICAL
- GUIDED ELECTROMAGNETIC SIGNAL
- HYDRAULIC SIGNAL
- SOFTWARE SIGNAL
- CAPILLARY TUBE SIGNAL

PROCESS LINE LEGEND

- NEW LINES
- NEW INTERMITTENT
- VENDOR SUPPLY
- FUTURE LINES
- EXISTING DESIGN
- EXISTING INTERMITTENT

DOC CONTROL
By Idelsca at 11:17:50, 04/11/2022

DRG No	REFERENCE DRAWINGS	No	DATE	REVISIONS	DRN	CHK'D	DESIGN	DESIGN APP'D	PROJ APP'D	CLIENT APP'D
		10	2022-04-22	AS BUILT	RVDB	JS		RB	GL	

DRAWN	CHECKED	DESIGN	SENIOR ENG	DESIGN APP'D	PROJ APP'D	CLIENT APP'D

METALKOL RTR

ROAN TAILINGS RECLAMATION PROJECT

This Drawing and its contents are confidential, are subject to return on demand and may not be copied or disclosed to any third party or used directly or indirectly for any other purpose other than as determined in writing by propriety agreement by the relevant party.

DRAWING TITLE
PROCESS
AREA 120 – LEACHING
COBALT LEACH TRAIN A (SHEET 3 OF 4)
PIPING AND INSTRUMENTATION DIAGRAM

SCALE	JOB No.	REFERENCE No.	REV.
N.T.S.	P31	200201-HDR-PRO-120-PID-008-01	10
DRAWN: PB	DATE: 2021-11-30	DWG No.: 150127-120-49D4-0008	

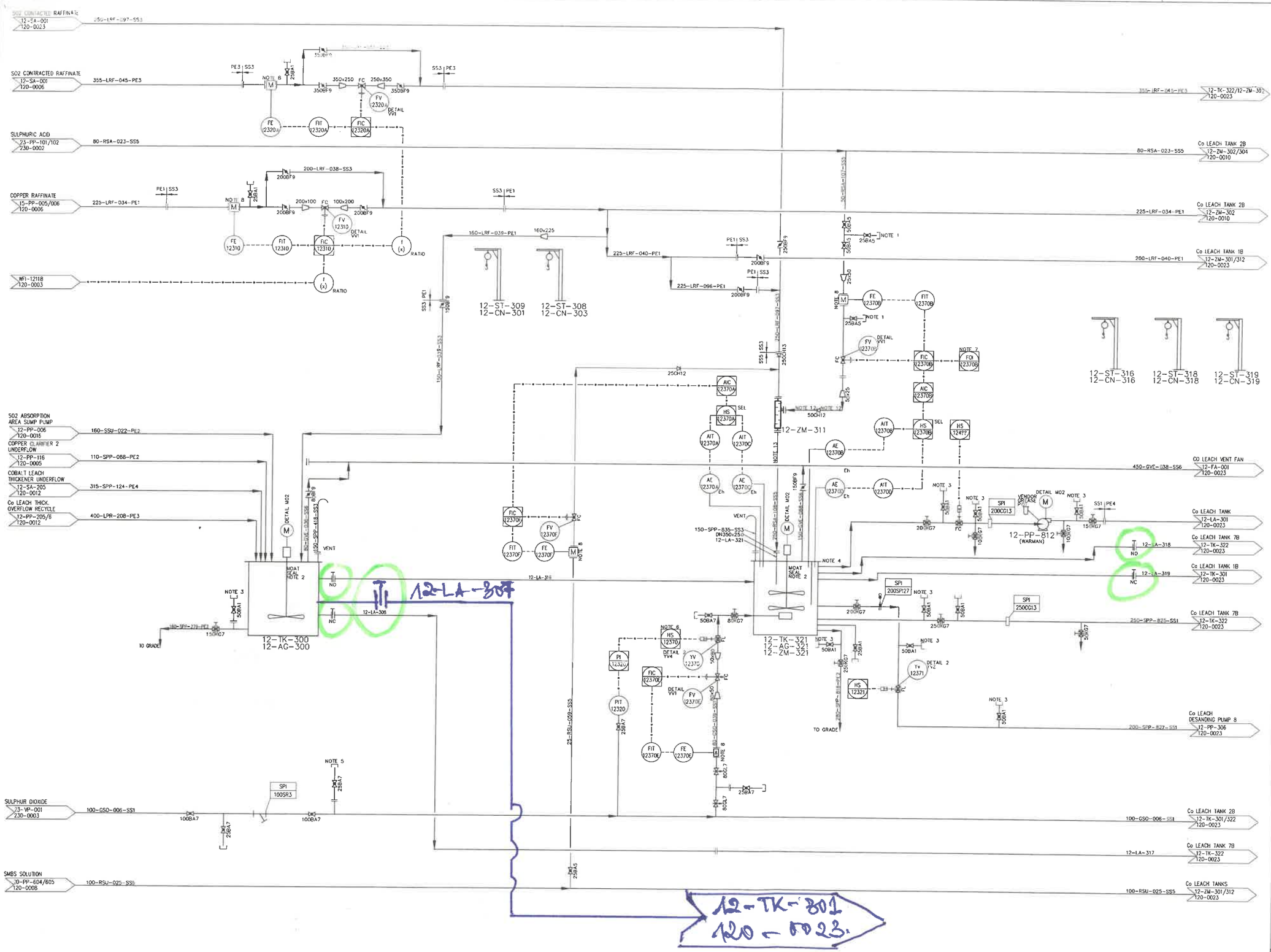

EQUIPMENT LIST

NUMBER EQUIPMENT	DESCRIPTION	CAPACITY VALUE	CAPACITY UNIT	POWER (kW)
12-AG-300	COBALT LEACH FEED TANK B AGITATOR			30
12-AG-321	COBALT LEACH TANK 6B AGITATOR			90
12-CN-302	COBALT LEACH FEED LAUNDER B DAVIT HOIST			
12-CN-303	COBALT LEACH FEED LAUNDER 2B DAVIT HOIST			
12-LA-316	COBALT LEACH FEED LAUNDER 5B			
12-LA-317	COBALT LEACH FEED LAUNDER 6B			
12-LA-308	COBALT LEACH FEED LAUNDER 2B			N/A
12-LA-318	COBALT LEACH INTERTANK LAUNDER 5B			
12-LA-319	COBALT LEACH INTERTANK LAUNDER 6B			
12-LA-311	COBALT LEACH TRAIN B SAMPLER DISCHARGE LAUNDER			N/A
12-LA-321	COBALT LEACH TANK 6B INLINE MIXER DISCHARGE LAUNDER			
12-PP-812	COBALT LEACH TANK DESANDING PUMP		m3/h	18.5
12-SA-301	COBALT LEACH TRAIN B FEED PRIMARY SAMPLER			0.37
12-SA-302	COBALT LEACH TRAIN B FEED SECONDARY SAMPLER			0.37
12-ST-308	COBALT LEACH FEED LAUNDER 2B DAVIT			
12-ST-309	COBALT LEACH FEED LAUNDER 1B DAVIT			
12-TK-300	COBALT LEACH FEED TANK B	38	m3	N/A
12-TK-321	COBALT LEACH TANK 6B	1000	m3	N/A
12-ZM-321	COBALT TANK 6B SULPHURIC ACID INLINE MIXER			
12-ZM-311	COBALT LEACH FEED LAUNDER 5B DAVIT HOIST			
12-CN-316	COBALT LEACH FEED LAUNDER 5B DAVIT HOIST			
12-CN-318	COBALT LEACH INTERTANK LAUNDER 5B DAVIT HOIST			
12-CN-319	COBALT LEACH INTERTANK LAUNDER 6B DAVIT HOIST			
12-ST-316	COBALT LEACH FEED LAUNDER 5B DAVIT			
12-ST-318	COBALT LEACH INTERTANK LAUNDER 5B DAVIT			
12-ST-319	COBALT LEACH INTERTANK LAUNDER 6B DAVIT			

NOTES:

1. ALL DRAINS ON RSA LINES TO BE PLUGGED.
2. REFER LEACHING AREA SEAL P&ID 120-PI-019.
3. ALL BAI FLUSHING VALVES PIPING TO BE SS1 SPEC.
4. ANALYTICAL ELEMENTS TO BE LOCATED IN TANK RISER.
5. SULPHUR DIOXIDE GAS LINE FLUSHING POINT WITH LOCKABLE VALVE USED FOR INSTRUMENT AIR CONNECTION.
6. VALVE CANNOT BE OPENED UNLESS THERE IS SUFFICIENT SO2 GAS LINE PRESSURE MEASURED BY PI-12320 ON 120-PI-006.
7. INDIVIDUAL ACID FLOWS ADDED FOR TOTAL ACID FLOW CALCULATION.
8. FLANGES TO DIN STANDARD.
9. DIN2501 PN25 FLANGES.
10. NEW DESANDING PUMP NOZZLE REQUIRED.
11. REFER TO CLAND WATER P&ID 240-0014.
12. PTFE OR PVDF LINED SPOOL PIECE.
13. PTFE LINED.

INSTRUMENT LINE LEGEND

- CONNECTION TO PROCESS
- PNEUMATIC SIGNAL
- ELECTRICAL
- GUIDED ELECTROMAGNETIC SIGNAL
- HYDRAULIC SIGNAL
- SOFTWARE SIGNAL
- CAPILLARY TUBE SIGNAL

PROCESS LINE LEGEND

- NEW LINES
- NEW INTERMITTENT
- VENDOR SUPPLY
- FUTURE LINES
- EXISTING DESIGN
- EXISTING INTERMITTENT

DOC CONTROL
By ideluca at 11:18:33, 04/11/2022

DRG No	REFERENCE DRAWINGS	No	DATE	REVISIONS	DRN	CHK'D	DESIGN	DESIGN APP'D	PROJ APP'D	CLIENT APP'D
		10	2022-10-25	AS BUILT	NS	JS		RB	GL	

DRAWN	CHECKED	DESIGN	SENIOR ENG	DESIGN APP'D	PROJ APP'D	CLIENT APP'D

METALKOL RTR

ROAN TAILINGS RECLAMATION PROJECT

This Drawing and its contents are confidential, are subject to return on demand and may not be copied or disclosed to any third party or used directly or indirectly for any other purpose other than as determined in writing by propriety agreement by the relevant party.

DRAWING TITLE
PROCESS
AREA 120 – LEACHING
COBALT LEACH TRAIN B (SHEET 1 OF 4)
PIPING AND INSTRUMENTATION DIAGRAM

SCALE	JOB No.	REFERENCE No.	REV.
N.T.S.	P31	200201-HDR-PRO-120-PID-009-01	10
DRAWN: PB	DATE: 2021-12-01	DWG No. 150127-120-49D4-0009	

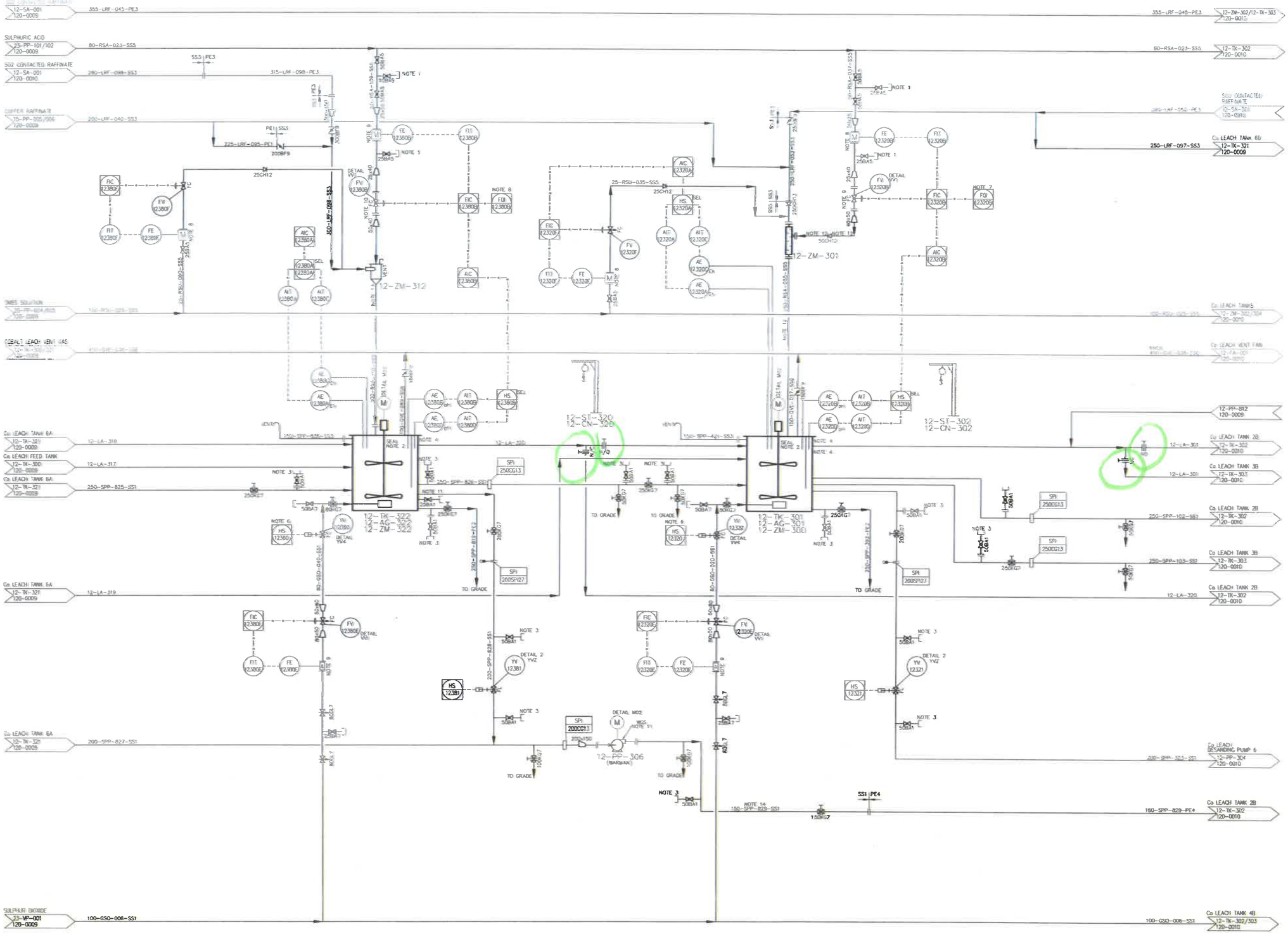

EQUIPMENT LIST

NUMBER (12 DIGIT)	DESCRIPTION	CAPACITY		POWER
12-AG-301	COBALT LEACH TANK 1B AGITATOR			90
12-AG-322	COBALT LEACH TANK 7B AGITATOR			90
12-CN-302	COBALT LEACH INTERTANK LAUNDER 1B DAVIT HOIST			
12-CN-320	COBALT LEACH INTERTANK LAUNDER 7B DAVIT HOIST			
12-LA-301	COBALT LEACH INTERTANK LAUNDER 1B			N/A
12-LA-320	COBALT LEACH INTERTANK LAUNDER 7B			
12-PP-306	COBALT LEACH DESANDING PUMP 8	208	m³/h	18.5
12-ST-302	COBALT LEACH INTERTANK LAUNDER 1B DAVIT			
12-ST-320	COBALT LEACH INTERTANK LAUNDER 7B DAVIT			
12-TK-301	COBALT LEACH TANK 1B	1000	m³	N/A
12-TK-322	COBALT LEACH TANK 7B	1000	m³	N/A
12-ZM-301	COBALT LEACH TANK 1B SULPHURIC ACID DILUTION POT			
12-ZM-305	COBALT LEACH TANK 4B SO2 SPARGER			
12-ZM-312	COBALT LEACH TANK 7B SULPHURIC ACID DILUTION POT			
12-ZM-320	COBALT LEACH TANK 1B SO2 SPARGER			

NOTES:

1. ALL DRAINS ON RSA LINES TO BE PLUGGED.
2. REFER LEACHING AREA SEAL PLAN 12-PI-019.
3. ALL ___BAY FLUSHING VALVES PIPING TO BE SS31 SPEC.
4. ANALYTICAL ELEMENTS TO BE LOCATED IN TANK RISER.
5. ATMOSPHERIC SO2/S4 GAS MONITORS TO BE INSTALLED AT THE TOP OF TANK LEVEL.
6. VALVE CANNOT BE OPENED UNLESS THERE IS SUFFICIENT SO2 GAS LINE PRESSURE MEASURED BY PI-12320.
7. SULPHUR DIOXIDE GAS LINE FLUSHING EXIT POINT WITH LOCKABLE VALVE. SO2/S4 GAS LINE CAN BE FLUSHED WITH INSTRUMENT AIR (REFER NOTE 5, 120-PI-0009) INTO 12-TK-305 VOID SPACE.
8. INDIVIDUAL ACID FLOWS ADDED FOR TOTAL ACID FLOW CALCULATION.
9. FLANGES TO DIN STANDARD.
10. DIN2501 PN25 FLANGES.
11. NEW DESANDING PUMP NOZZLE REQUIRED.
12. REFER TO GLAND WATER P&ID 240-0018.
13. PTFE LINED.
14. SS1 PIPE ON SPP APPLICATIONS TO BE LINED.

INSTRUMENT LINE LEGEND

- CONNECTION TO PROCESS
- PNEUMATIC SIGNAL
- ELECTRICAL
- GUIDED ELECTROMAGNETIC SIGNAL
- HYDRAULIC SIGNAL
- SOFTWARE SIGNAL
- CAPILLARY TUBE SIGNAL

PROCESS LINE LEGEND

- NEW LINES
- NEW INTERMITTENT
- VENDOR SUPPLY
- FUTURE LINES
- EXISTING DESIGN
- EXISTING INTERMITTENT

DOC CONTROL
By kleluca at 11:31:22, 04/11/2022

DRAWN	CHECKED	DESIGN	SENIOR ENG	DESIGN APP'D	PROJ APP'D	CLIENT APP'D

DRG No	REFERENCE DRAWINGS	No	DATE	REVISIONS	DRN	CHK'D	DESIGN	DESIGN APP'D	PROJ APP'D	CLIENT APP'D
		10	2022-10-25	AS BUILT	NS	JS		RB	GL	
		No	DATE	REVISIONS	DRN	CHK'D	DESIGN	DESIGN APP'D	PROJ APP'D	CLIENT APP'D

METALKOL RTR

rtr SLAG TAILINGS RECLAMATION PROJECT

This Drawing and its contents are confidential, are subject to return on demand and may not be copied or disclosed to any third party or used directly or indirectly for any other purpose other than as determined in writing by propriety agreement by the relevant party.

DRAWING TITLE
PROCESS
AREA 120 – LEACHING
COBALT LEACH TRAIN B (SHEET 4 OF 4)
PIPING AND INSTRUMENTATION DIAGRAM

SCALE	JOB No.	REFERENCE No.	REV.
N.T.S.	P31	200201-HDR-PRO-120-PID-023-01	10
DRAWN: PB	DATE: 2021-12-08	DWG No. 150127-120-49D4-0023	

EQUIPMENT LIST

EQUIPMENT	DESCRIPTION	VALUE	UNIT	(kW)
12-AG-302	COBALT LEACH TANK 2B AGITATOR			90
12-AG-303	COBALT LEACH TANK 3B AGITATOR			90
12-CN-304	COBALT LEACH INTERBANK LAUNDER 2B DAVIT HOIST			
12-CN-305	COBALT LEACH INTERBANK LAUNDER 3B DAVIT HOIST			
12-LA-301	COBALT LEACH INTERTANK LAUNDER 1B			
12-LA-302	COBALT LEACH INTERTANK LAUNDER 2B			
12-LA-303	COBALT LEACH INTERTANK LAUNDER 3B			
12-LA-309	COBALT LEACH FEED LAUNDER 4			
12-PP-303	COBALT LEACH DESANDING PUMP 4	1300	m3/h	185
12-PP-304	COBALT LEACH DESANDING PUMP 5	1300	m3/h	185
12-ST-303	COBALT LEACH INTERBANK LAUNDER 2B DAVIT			
12-ST-304	COBALT LEACH INTERBANK LAUNDER 3B DAVIT			
12-TK-302	COBALT LEACH TANK 2B	1000	m3	
12-TK-303	COBALT LEACH TANK 3B	1000	m3	
12-ZM-302	COBALT LEACH TANK 2B SULPHURIC ACID DILUTION POT			
12-ZM-303	COBALT LEACH TANK 2B SO2 SPARGER			
12-ZM-304	COBALT LEACH TANK 3B SULPHURIC ACID DILUTION POT			
12-ZM-305	COBALT LEACH TANK 3B SO2 SPARGER			

NOTES:
1. ALL PIPING ON RSA LINES TO BE PLUGGED
2. REFER LEACHING AREA SEAL P&ID 120-PI-019.
3. ALL ___BA1 FLUSHING VALVES PIPING TO BE SS1 SPEC.
4. ANALYTICAL ELEMENTS TO BE LOCATED IN TANK RISER.
5. ATMOSPHERIC SO2/S4 GAS MONITORS TO BE INSTALLED AT THE TOP OF TANK LEVEL.
6. VALVE CANNOT BE OPENED UNLESS THERE IS SUFFICIENT SO2 GAS LINE PRESSURE MEASURED BY PI-12320.
7. SULPHUR DIOXIDE GAS LINE FLUSHING EXIT POINT WITH LOCKABLE VALVE. SO2/S4 GAS LINE CAN BE FLUSHED WITH INSTRUMENT AIR (REFER NOTE 5, 120-PI-009) INTO 12-TK-305 VOID SPACE.
8. INDIVIDUAL ACID FLOWS ADDED FOR TOTAL ACID FLOW CALCULATION.
9. FLANGES TO DIN STANDARD.
10. DIN2501 PN25 FLANGES.
11. NEW DESANDING PUMP NOZZLE REQUIRED.
12. REFER TO CLAND WATER P&ID 240-0014.
13. (PTFE LINED.)
14. SS1 PIPE ON SPP APPLICATION TO BE BORDBAK LINED.

注意:

1. 介质为RSA的管线上的所有排水管都要塞紧。
2. 参考现出厂域水封水P&ID 120-PI-019。
3. 所有的BA1冲洗阀对应的管道等级都是SS1。
4. 分析元件位于现出阀塔开始上。
5. 检测大气中二氧化硫气体含量的检测器安装在逃出循环邻位置。
6. PI-12320检测测足够的二氧化硫气体管道压力，否则不允许打开阀门。
7. 二氧化硫气体管道冲洗点上有带锁阀门。二氧化硫气体管道用仪表用气（参考NOTE 5, 120-PI-009）冲洗进入12-TK-305-VOID空间。
8. 个体的酸流量包加为个体的酸流量。
9. 法兰按DIN标准。
10. DIN2501 PN25法兰。
11. 新的除砂泵管嘴是必需的。
12. 参考轨道水P&ID 240-0014。
13. 衬PTFE。
14. 埋上矿管输送(SPP)的导线与SS1的管道需要获得WORDBAK衬垫

INSTRUMENT LINE LEGEND
- Connection to Process
- Pneumatic Signal
- Electric
- Guided Electromagnetic Signal
- Hydraulic Signal
- Software Signal
- Capillary Tube Signal

PROCESS LINE LEGEND
- New Lines
- New Intermittend
- Vendor Supply
- Future Lines
- Existing Design
- Existing Intermittend

ISSUED FOR CONSTRUCTION

DRG No	REFERENCE DRAWINGS	No	DATE	REVISIONS	DRN	CHK'D	DESIGN	DESIGN APP'D	PROJ APP'D	CLIENT APP'D
		06	2017-07-29	REVISED AS MARKED	LWH	HSC	LWH	WLM		
		05	2017-03-21	NFC REISSUED FOR CONSTRUCTION	LWH	HSC	LWH	WLM		
		04	2016-12-19	UPDATED TO HAZOP 3 REQUIREMENTS	LWH	HSC	LWH	WLM		
		03	2016-10-19	UPDATED BY COMMENTS	LWH	HSC	LWH	WLM		
		02	2015-12-21	NFC-ISSUED FOR CONSTRUCTION	HSC	DM	DM	AL		
		01	2015-01-09	SUSPENSION - RE-ISSUED FOR CONSTRUCTION	AH	JC	AL	PC		
		00	2013-10-29	ISSUED FOR CONSTRUCTION	PRE	TGO	TvZ	JJT	.	.
			2013-XX-XX							

DATE	DRAWN	CHECKED	DESIGN	SENIOR ENG	DESIGN APP'D	PROJ APP'D	CLIENT APP'D

METALKOL SA

RTR ROAN TAILINGS RECLAMATION PROJECT

SNC·LAVALIN
Block A – Cullinan Place
2 Cullinan Close, Morningside
Sandton, 2146
South Africa

Lycopodium

This Drawing and its contents are confidential, are subject to return on demand and may not be copied or disclosed to any third party or used directly or indirectly for any other purpose other than as determined in writing by propriety agreement by the relevant party.

DRAWING TITLE
PROCESS
LEACHING
COBALT LEACH TRAIN B (SHEET 2 OF 3)
PIPING & INSTRUMENTATION DIAGRAM

SCALE	JOB No.	REFERENCE No.	REV.
NTS	1400	120-PI-010	06
DRAWN	DATE	DWG No.	
P.REED	2013-06-04	150127-120-49D4-0010	

EQUIPMENT LIST

NUMBER EQUIPMENT	DESCRIPTION	CAPACITY VALUE	CAPACITY UNIT	POWER kW
12-AG-304	COBALT LEACH TANK 4B AGITATOR			90
12-AG-305	COBALT LEACH TANK 5B AGITATOR			90
12-CN-306	COBALT LEACH INTERTANK LAUNDER 4B DAVIT HOIST			
12-CN-307	COBALT LEACH DISCHARGE LAUNDER 1B DAVIT HOIST			
12-LA-302	COBALT LEACH INTERTANK LAUNDER 2B			
12-LA-303	COBALT LEACH INTERTANK LAUNDER 3B			
12-LA-304	COBALT LEACH INTERTANK LAUNDER 4B			N/A
12-LA-305	COBALT LEACH DISCHARGE LAUNDER 1B			N/A
12-LA-306	COBALT LEACH DISCHARGE LAUNDER 2B			
12-PP-302	COBALT LEACH AREA SUMP PUMP 2	160	m3/h	55
12-PP-305	COBALT LEACH DESANDING PUMP 2	1235	m3/h	18.5
12-PP-810	COBALT LEACH TANK 305 DESANDING PUMP		m3/h	18.5
12-ST-305	COBALT LEACH INTERTANK LAUNDER 4B DAVIT			
12-ST-306	COBALT LEACH DISCHARGE LAUNDER 1B DAVIT			
12-ST-307	COBALT LEACH AREA SUMP PUMP 2 SUPPORT FRAME			
12-TK-304	COBALT LEACH TANK 4B	1000	m3	N/A
12-TK-305	COBALT LEACH TANK 5B	1000	m3	N/A
12-ZM-306	COBALT LEACH TANK 4B SULPHURIC ACID DILUTION POT			
12-ZM-307	COBALT LEACH TANK 4B SO2 SPARGER			
12-ZM-308	COBALT LEACH TANK 5B SULPHURIC ACID DILUTION POT			
12-ZM-309	COBALT LEACH TANK 5B SO2 SPARGER			

NOTES:

1. REFER GLAND WATER P&ID 240-PI-014
2. ALL DRAINS ON RSA LINES TO BE PLUGGED.
3. REFER LEACHING AREA SEAL P&ID 120-PI-019.
4. ALL ___BA1 FLUSHING VALVES PIPING TO BE SS1 SPEC.
5. ANALYTICAL ELEMENTS TO BE LOCATED IN TANK RISER.
6. VALVE CANNOT BE OPENED UNLESS SUFFICIENT SO254 GAS LINE PRESSURE MEASURED BY PI-12220 ON 120-PI-006.
7. SULPHUR DIOXIDE GAS LINE FLUSHING POINT WITH LOCKABLE VALVE.SO254 GAS LINE FLUSHED WITH INSTRUMENT AIR (REFER NOTE 5, 120-PI-006) INTO 12-TK-205-VOID SPACE.
8. INDIVIDUAL ACID FLOWS ADDED FOR TOTAL ACID FLOW CALCULATION.
9. TOTAL COBALT LEACH TRAIN A ACID FLOW CALCULATED.
10. FLANGES TO DIN STANDARD.
11. DIN2501 PN25 FLANGES.
12. 316 S/S BLIND FLANGE.
13. PTFE LINED.
14. NEW VALVE.
15. SS1 PIPE ON SPP APPLICATION TO BE LINED.

INSTRUMENT LINE LEGEND

- CONNECTION TO PROCESS
- PNEUMATIC SIGNAL
- ELECTRICAL
- GUIDED ELECTROMAGNETIC SIGNAL
- HYDRAULIC SIGNAL
- SOFTWARE SIGNAL
- CAPILLARY TUBE SIGNAL

PROCESS LINE LEGEND

- NEW LINES
- NEW INTERMITTENT
- VENDOR SUPPLY
- FUTURE LINES
- EXISTING DESIGN
- EXISTING INTERMITTENT

DOC CONTROL
By ldeluca at 11:20:59, 04/11/2022

DRAWN	CHECKED	DESIGN	SENIOR ENG	DESIGN APP'D	PROJ APP'D	CLIENT APP'D

DRG No	REFERENCE DRAWINGS	No	DATE	REVISIONS	DRN	CHK'D	DESIGN	DESIGN APP'D	PROJ APP'D	CLIENT APP'D
		10	2022-10-25	AS BUILT	NS	JS		RB	GL	

METALKOL RTR

rtr ROAN TAILINGS RECLAMATION PROJECT

This Drawing and its contents are confidential, are subject to return on demand and may not be copied or disclosed to any third party or used directly or indirectly for any other purpose other than as determined in writing by propriety agreement by the relevant party.

DRAWING TITLE
PROCESS
AREA 120 – LEACHING
COBALT LEACH TRAIN B (SHEET 3 OF 4)
PIPING AND INSTRUMENTATION DIAGRAM

SCALE	JOB No.	REFERENCE No.	REV.
N.T.S.	P31	200201-HDR-PRO-120-PID-011-01	10

DRAWN	DATE	DWG No.
PB	2021-12-03	150127-120-49D4-0011

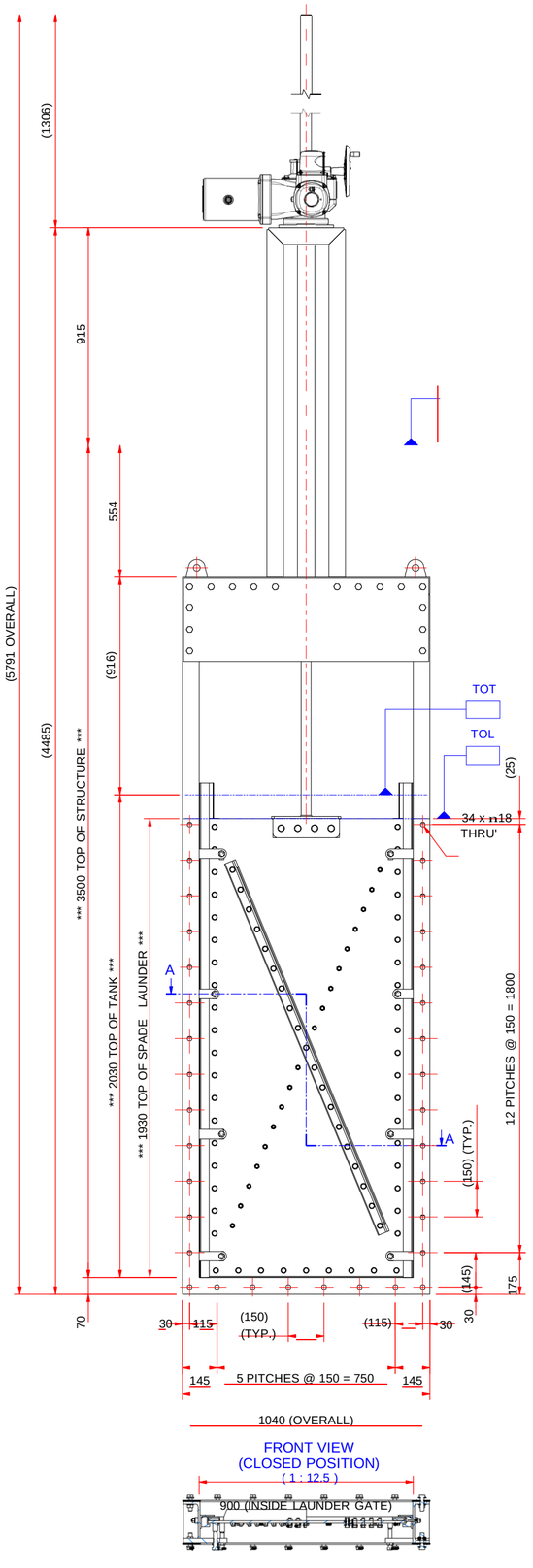

FRONT VIEW
(CLOSED POSITION)
(1 : 12.5)

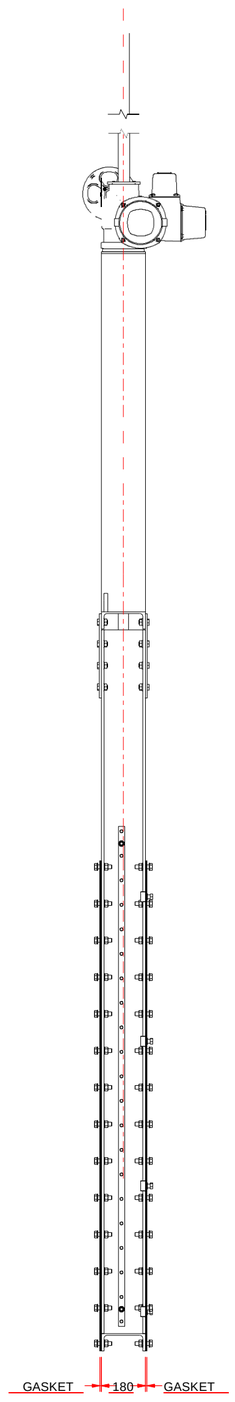

SIDE VIEW

(1 : 12.5)

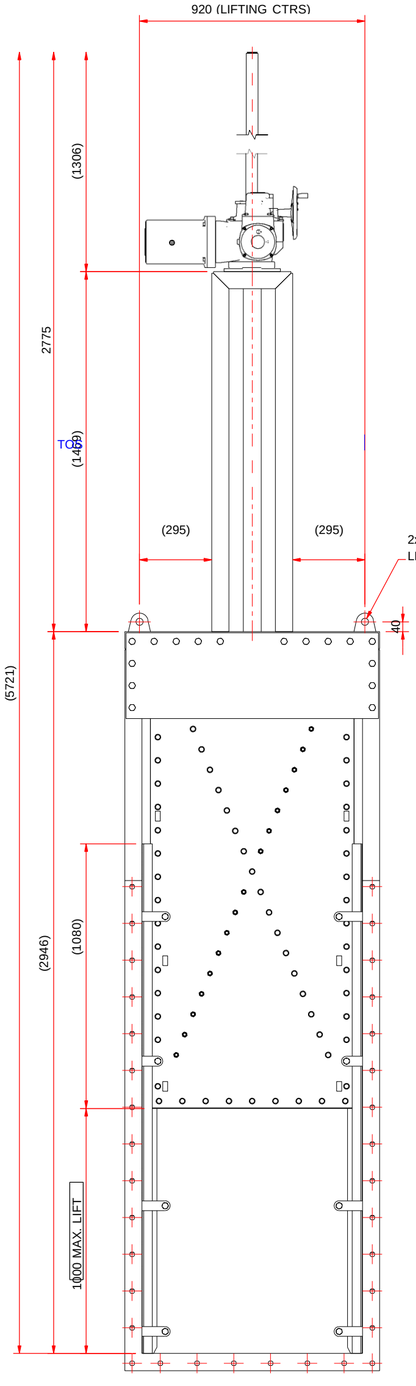

FRONT VIEW

(1 : 12.5)

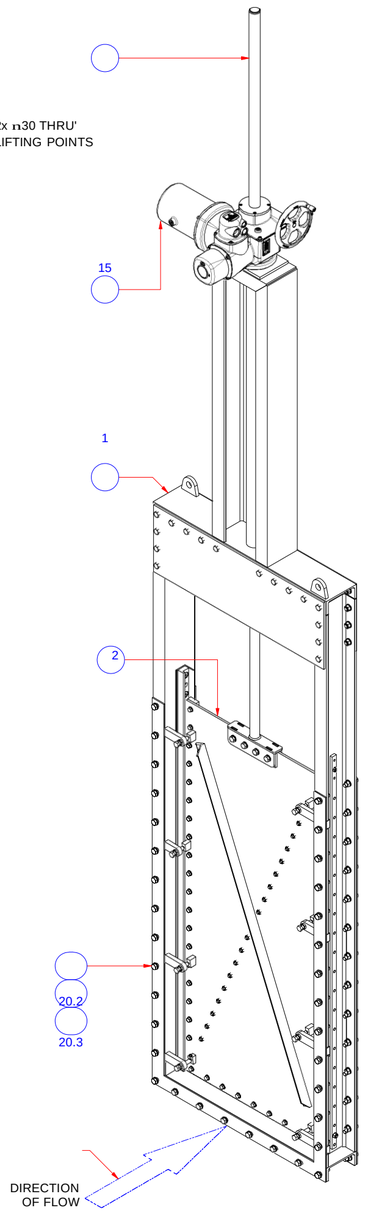

ISOMETRIC VIEW

NOTES:
1. QTY : 3 OFF
2. STROKE : 1000 mm
3. LAUNDER GATE TO LAUNDER FASTENERS SUPPLIED: STAINLESS STEEL - 316.
4. NOTES MARKED "***" TO BE CONFIRMED BY CLIENT.

SEALING SPECIFICATION (REFER TO DETAIL DRAWING)
- VERTICAL SEALING PLATE - POLYURETHANE COATED - 60 SHORE
- HORIZONTAL SPADE SEAL - POLYURETHANE COATED - 40 SHORE
- VALVE SEALING GASKET - 6mm NATURAL RUBBER GASKET - 50 SHORE

EQUIPMENT NUMBERS:
- TO BE CONFIRMED BY THE CLIENT.

ITEM	QTY	PART NUMBER	DESCRIPTION	MATERIAL	MASS
20.3	68	ISO 4032 - M16	HEX NUT - GR 8.8	316 SS	2,0 kg
20.2	136	GR 8.8 - NW - M16	THRU HARD WASHER - ISO 7089	316 SS	1,5 kg
20.1	68	ISO 4014 - M16x60	HEX BOLT - GR 8.8	316 SS	9,2 kg

FASTENER LIST

ITEM	QTY	PART NUMBER	DESCRIPTION	MASS

BOUGHT OUT COMPONENTS

ITEM	QTY	PART NUMBER	DESCRIPTION	MATERIAL	MASS
3	1	60-03-04	SPINDLE COVER	MS - PAINTED	5,1 kg
2	1	60-02	COMPLETE SPADE ASSEMBLY	316 SS	192,0 kg
1	1	60-01	COMPLETE FRAME ASSEMBLY	316 SS	358,6 kg

ASSEMBLY LIST

REV:	NAME:	DATE:	DESCRIPTION:
A	A.JEFFREY	24 MAR 2023	DRAWING ISSUED FOR TENDER PURPOSES.

CLIENT: AR CONTROLS

PROJECT: DRC MINE

THIS DRAWING IS THE PROPERTY OF KEMIX (PTY) LTD AND MAY NOT BE COPIED OR WITHOUT THE WRITTEN PERMISSION OF THE AFOREMENTIONED COMPANY.

DRAWING NO:

REFERENCE DRAWING TITLE:

DRAWN BY: A.JEFFREY
DATE: 24 Mar 2023
ENGINEER: J.HORN
MODEL: 900W
SIZE 1: 900x1930x10 SPADE
SIZE 2:

KEMIX (PTY) LTD
47 KYALAMI BLVD, KYALAMI BUSINESS PARK
JOHANNESBURG, SOUTH AFRICA
P.O. BOX 31949, KYALAMI, 1684
TEL. (+27 11) 466 2490
FAX (+27 11) 466 2190
E-MAIL: kemix@kemix.com
WEB: www.kemix.com

TITLE:

G.A. OF 900mm WIDE MOTORIZED ACTUATED LAUNDER GATE